HYDRAULICKÉ MECHANISMY

Hydrauli CS

COMPANY WITH 25 - YEARS TRADITION

LINEAR HYDRAULIC MOTORS
- PRODUCTION
- SERVICE

HYDRAULIC SYSTEMS
- DESIGN
- REALIZATION

SALE
- CHROME BARS
- CYLINDER TUBES
- SHAFTS FOR LINEAR MOTION

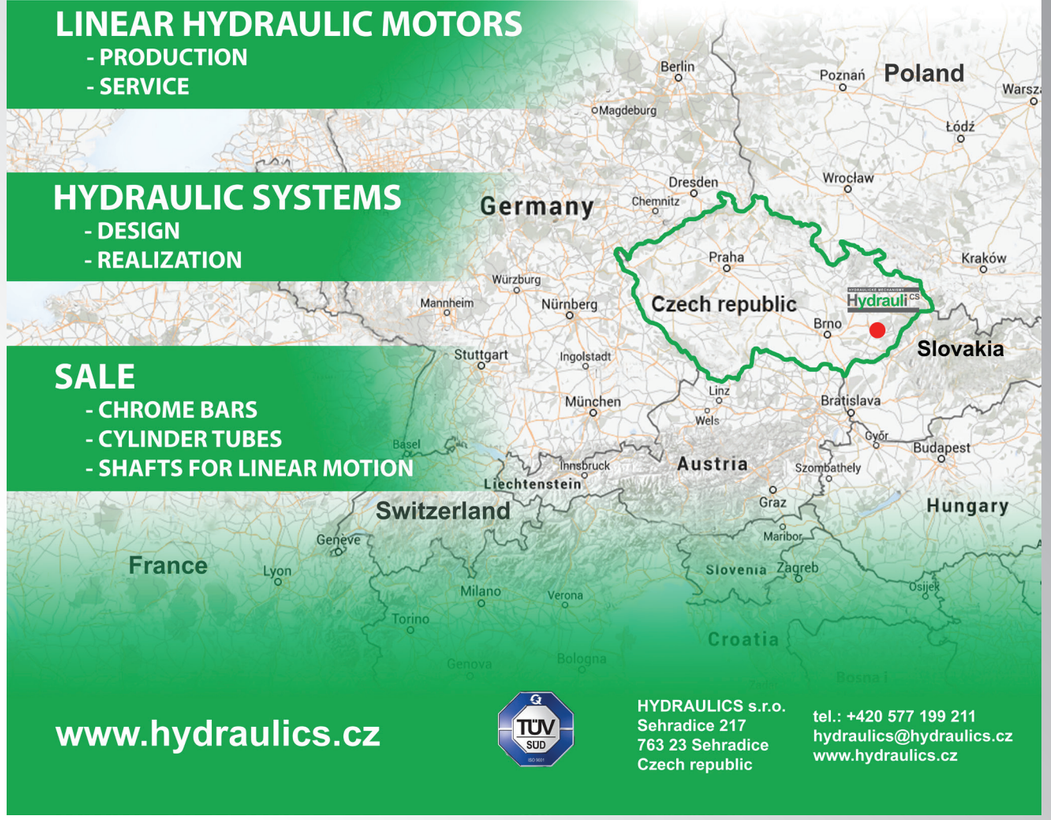

www.hydraulics.cz

TÜV SÜD

HYDRAULICS s.r.o.
Sehradice 217
763 23 Sehradice
Czech republic

tel.: +420 577 199 211
hydraulics@hydraulics.cz
www.hydraulics.cz

www.hydraulics.cz

PRODUCTION CATALOGUE

OF THE LINEAR HYDRAULIC MOTORS

2015

HYDRAULICKÉ MECHANISMY

Hydrauli CS

UPDATE 03/2015

PRODUCTION CATALOGUE OF THE LINEAR HYDRAULIC MOTORS

HYDRAULICS s.r.o.
Sehradice 217
763 23 Sehradice
Czech Republic

Operator .....+420 577 199 211
Fax .....+420 577 199 212
Management .....+420 577 199 214
Sales department, supply ..... +420 577 199 229
Technical consultation .....+420 577 199 211
Economic department .....+420 577 199 218

E-mail: hydraulics@hydraulics.cz
http://www.hydraulics.cz

Dear business partners,

this catalogue, which is an intellectual property of Hydraulics s.r.o., provides information for your needs and to aid our mutual cooperation.

Unfortunately it has happened that our intellectual property has been stolen. This is considered unlawful theft, however, we are also pleased that the quality of information in this catalogue is so valuable even to our competitors in manufacturing of hydraulic cylinders.

Thank you for your understanding.

HYDRAULICKÉ MECHANISMY

Hydrauli CS

Content

About Us

Research and development of hydraulic systems - designed namely for building technologies, agricultural, road and other mobile mechanism during the 80's last century - induced in Czechoslovakia at the time a need for servicing and refurbishment of linear hydraulic engines - hydraulic cylinders. In Sehradice, near Luhačovice, in a small so-called subsidiary enterprise, foundations of **HYDRAULICS s.r.o. Sehradice** were laid in 1983.

18 workers, revenues of approx. CZK 18 mio/year, simple machinery equipment, one desktop computer TNS, but namely private enterprise enthusiasm in the beginning of 90's, years of political and economy changes were the founding equipment of the company.

The production program has changes from common repairs to production and manufacture of new hydraulic cylinders. Articles of Incorporation were initiated in 1991 by **ing. Jaromír Pilík, Libor Kráčalík and ing. Daneš Janík**.

Company progress

The fundamental modification in the production program of HYDRAULICS s.r.o. has been the technology utilizing precise rolled tubes for hydraulic motor casings and ready-made chrome-plated rods for utilized for piston rods. Social changes in the beginning of 90's created extensive opportunities for purchasing of these blanks in European markets.

In the field of sealing elements, an opportunity arose to replace the monopoly supplier from Czech Republic by quality seals from foreign producers and supliers renowned brands.

This gave us significant expansion of manufactured product range and improve product quality. Repairs and beginnings of productions were based namely on programs of large state enterprises, namely from Slovak ZŤS concern.

The federation split in 1993 caused unexpected and prompt separation of main Slovak producers from the Czech market. New demands for powerful, reliable and safe machines arose, which could provide works associated with building of modern constructions, handling and communal technologies. Demand for replacements of abroad-manufactured cylinders grew, too.

A great leap forward in our company was the edition of our own **production catalog** and establishment of our own **design department**. These changes and the gradual replacement of classic machine tools with **CNC** systems with qualified personnel has moved the production one step up in terms of the quality.

However, the location of Sehradice near the Czech Republic's eastern border was not advantageous. Continuation of the flexible cooperation with Slovakia and Czech customers helped to maintain several servicing and **replacement centers** for hydraulic cylinders all over the Czechoslovakia.

In 2005 we significantly increased both the production capacity and the capacity of storage of metallurgical capacity by building the **new hall in Slopné**. Storage capacities for precise tubes and chrome-plated rods were increased by 400 sq m, thus establishing better conditions for expansion of commercial activities with such materials. Production was enlarged with 700 sq m of the new production area.

Turnover and number of new products had been subject to a dynamic growth until 2008. With nearly 20.000 produced hydraulic cylinders, we are ranked to the biggest producers of our range in Czech Republic.

We have responded to the worldwide economy downturn in 2009 by extending our design department and marketing department. We tried to provide quality services and to satisfy customer's requirements for special custom production, mainly piece-production. At the same time, company management decided to reduce the leased area by expansion of it´s own production area in Slopné.

After overcoming the attenuation of production in 2009, we will again get up a speed. In 2011 was completed an extension of production hall in Slopné and expanded production area by additional 250 m^2. Our company celebrates 20 years on market.

In 2012 we started with wider application of hydraulics and realization of hydraulic systems.

In the middle of 2013 we completed the renovation and construction of a new production hall in the industrial area again in Slopné. The event was co-financed by the Operational Programme Enterprise and Innovation within the MPO subsidies and EU structural funds.

We have acquired to use an object with 850 m^2 of production space and 800 m^2 of technical and social background.

News

2014 we decided to support quality improvement and quality system throughout the company. Proof of success in this field is a certification according to ČSN EN ISO 9001:1997 by TÜV SÜD Czech.

We expect that 2015 and 2016 will be another milestone for the company in the centralization of the company's activities. There is a project of further building of manufacturing and warehouse space, in areas of the resort Slopné. This time it is the largest investment project, which move all manufacturing at one place.

HYDRAULICS s.r.o., Sehradice is a reliable partner not only in its field of enterprise. The company duly and on time performs all its obligations towards suppliers and state agencies We strive to meet customers' needs by our prompt delivery terms and acceptable prices. The quality focus and prompt fulfillment of orders have become the center of our activities. However, sometimes isn´t possible to satisfy all difficulty requirements of our customer for 100%. The ever more increasing technical complexity of hydraulic cylinders, their dimensions and requirements, very short term for the execution of contracts, is a challenge for us in the future. Besides the already mentioned realizations and plans for bulding infrastructure we want in a subsequent period increase the technical development of the real review of the work of our design department. The plan includes building new areas for testing and real operation simulation for thorough testing of our products - linear hydraulic motors.

At this time the company HYDRAULICS s.r.o. employs 125 employers with an annual turnover nearly 200 mil. CZK. Its obligations to suppliers and government institutions fulfill in due dates.

In terms of **social activities**, the company strives to continuously improve conditions for its employees, whether in terms of occupational health and safety, sport and sponsoring activities. We are regular sponsors of sporting and cultural events, social projects, the Health and of Education.

In Sehradice, on March 4, 2015

EH
DOUBLE-ACTING – for light working conditions
P_{max} 18 MPa

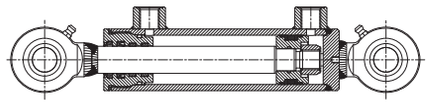

EH

ZH1
DOUBLE-ACTING – without dumping at the end positions
P_{max} 20 MPa

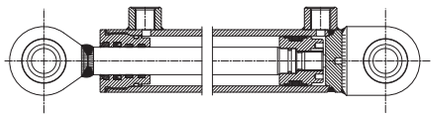

ZH1

ZH2
DOUBLE-ACTING – without dumping at the end positions
P_{max} 25 MPa

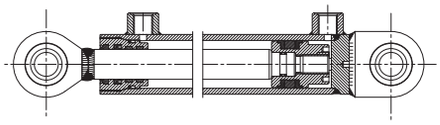

ZH2

ZH2T
DOUBLE-ACTING – with dumping at the end positions
P_{max} 25 MPa

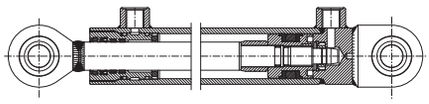

ZH2T

ZH2RT
DOUBLE-ACTING – with regulated dumping at the end positions
P_{max} 25 MPa

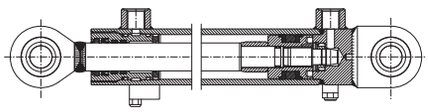

ZH2RT

ZH PL
SINGLE-ACTING – plunger
P_{max} 25 MPa

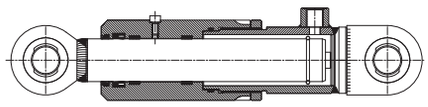

ZH-PL

ZH PL1
SINGLE-ACTING – plunger with guided piston
P_{max} 25 MPa

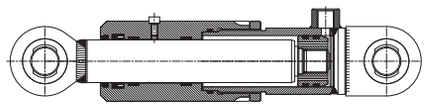

ZH-PL1

ZH1/2
DOUBLE-ACTING with the continuous piston rod without dumping at the end positions
P_{max} 25 MPa

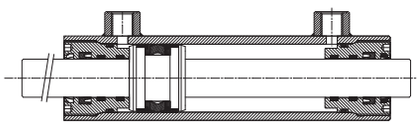

ZH1/2

ZH1/2T
DOUBLE-ACTING with the continuous piston rod with dumping at the end positions
P_{max} 25 MPa

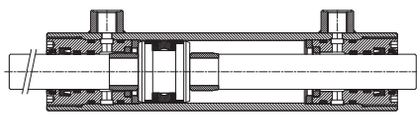

ZH1/2T

Linear Hydraulic Motors (LHM) ISO 6022
DOUBLE-ACTING HYDRAULIC MOTOR
P_{max} 25 MPa/30 MPa

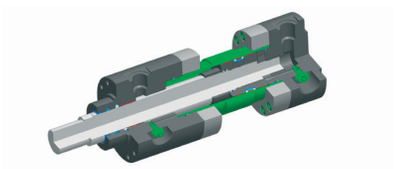

ISO 6022

TELESCOPIC HYDRAULIC MOTOR

SWIVEL HYDRAULIC MOTOR

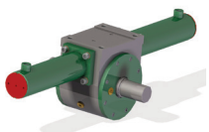

LINEAR HYDRAULIC MOTOR WITH MECHANICAL LOCK

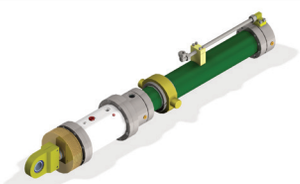

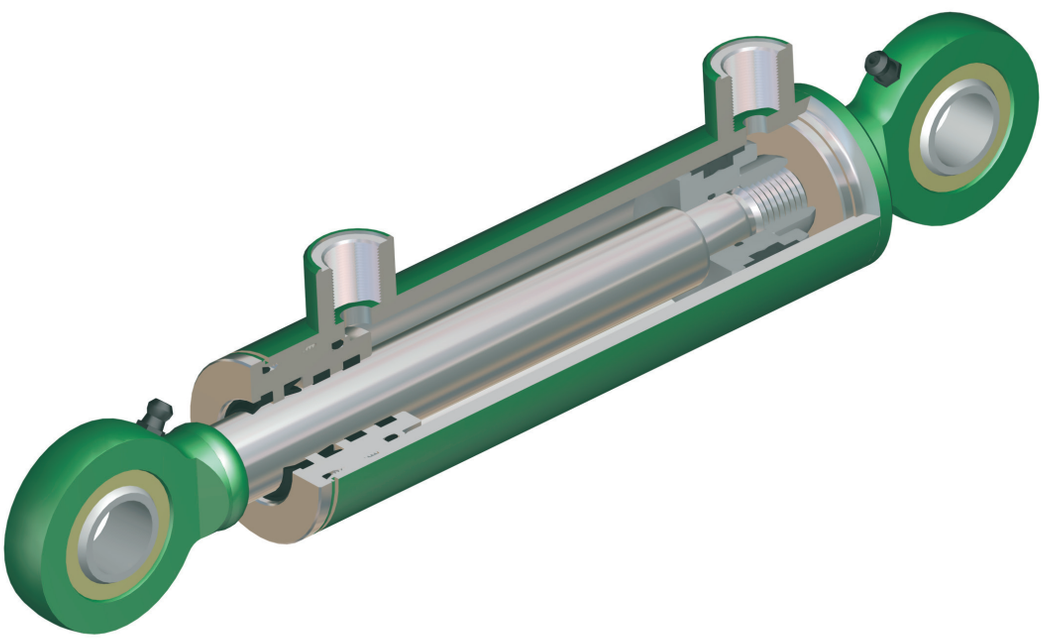

Linear hydraulic motors of the EH series

EH

TECHNICAL DESCRIPTION – PRODUCT FUNCTION

The EH linear hydraulic motor is the element which converts the pressure energy to the mechanical energy – to the axial power of the piston rod in both directions. They have – by their construction – no special demands for service and maintenance. It is necessary to obey the service and technical conditions for perfect and secure function of the motor.
The EH hydraulic motor is composed of the welded tube with precision worked inner diameter within the H9 allowance. On the tube there are welded the connection necks for inlet of the pressure oil with internal thread and the plug together with solid cylinder eye.
Both the cylinder eye and piston rod eye are equipped with the knuckle bearing. The lid for piston rod guidance with the sealing elements is screwed into the tube of cylinder cover. On the grinded – polished and chromed piston rod with the dimension tolerance f7 there is the connection eye welded from one side and the second end is equipped with the piston.
The EH hydraulic motors are designed mainly for the light work loads with preferably lower number of work cycles. Their construction is based on the aim to provide a reliable product for a really favourable price.

OPERATING CONDITIONS

The linear hydraulic motors of this kind do not require any special demands for service and maintenance.

- the mounting of LHM must be done under conditions preventing the damage of function parts and which secure the protection of inner space against penetration of impurities
- properly provide the connection of LHM to the pressure source (danger of oil pressure decrease) and the mounting of LHM into the kinematic system of the given machine/device
- the work position of LHM is optional if not otherwise specified
- radial load of the piston rod by external force or its rotation during working time are not allowed
- take care during the work to prevent the mechanical damages of the piston rod
- the hydraulic motor must not be loaded in the end positions by external force or by power of steady mass corresponding to 1,25 multiple of rated pressure
- when mounted into the machine's mechanical parts (or into some device) the possibility of swiveling of hydraulic cylinder body must be secured in transverse direction in the area of allowed swiveling of knuckle bearing
- LHM must not be exposed to any aggressive agents, aggressiveness of which would exceed the guaranteed resistance value for the motor piston rod used. The resistance value is specified in technical conditions.

TECHNICAL CONDITIONS

Work liquid	– hydraulic mineral oil (OH-HM 32, OH-HM 46, OH-HM 64)
Required filtration	– min. 40 μm, we recommend 25 μm
Temperature scope	– liquid -20°C ÷ +80°C
	– ambient -20°C ÷ +70°C
Climatic stability	– temperate climate WT
Rated pressure	– 16 MPa
Maximum pressure	– 18 MPa
Test pressure	– 18 MPa
Work speed	– maximum 0,5 $m \cdot s^{-1}$
The piston rod resistance value in the salt chamber pursuant to ISO 4540	– 120 hours

MARKING

Each hydraulic motor manufactured in our factory is marked with following data:

HYDRAULICS SEHRADICE
EH D/d x Z R / K /
MAX.OPERATING PRESSURE
SERIAL NUMBER

Part of the item delivery is the accompanying documentation containing

ITEM SAFEGUARD and
QUALITY CERTIFICATE /document details see page no. 97-98/.

EH Series

for P_{max} 18 MPa

Position of the screws joint to the swing plane

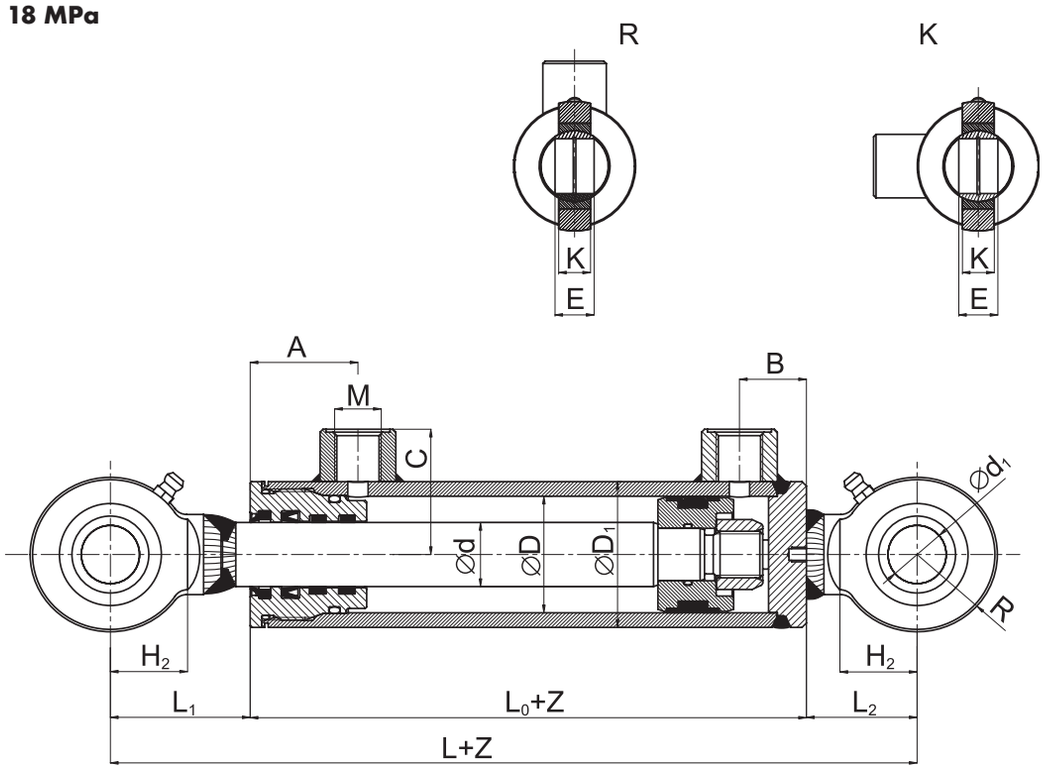

ØD	Ød	$ØD_1$	$Ød_1$	L	L_0	L_1	L_2	H_2	M	A	B	C	R	K	E	Maximum recom. lift acc. to selected Ød	Weight under given lift Z
40	22	50	20	177	91	48	38	26.5	16x1.5	37	23	43	26.5	13	16	280	1.73 + Z x 0.00900
40	25	50	20	177	91	48	38	26.5	16x1.5	37	23	43	26.5	13	16	380	1.75 + Z x 0.01000
40	28	50	20	177	91	48	38	26.5	16x1.5	37	23	43	26.5	13	16	510	1.77 + Z x 0.01080
50	25	60	25	207	105	57	45	32	16x1.5	40	23	48	32	17	20	280	2.93 + Z x 0.01080
50	28	60	25	207	105	57	45	32	16x1.5	40	23	48	32	17	20	370	2.95 + Z x 0.01160
50	32	60	25	207	105	57	45	32	16x1.5	40	23	48	32	17	20	520	2.95 + Z x 0.01310
63	32	73	25	224	199	60	45	32	16x1.5	46	28	54.5	32	17	20	380	4.11 + Z x 0.01651
63	36	73	25	224	199	60	45	32	16x1.5	46	28	54.5	32	17	20	510	4.12 + Z x 0.01821
63	40	73	25	224	199	60	45	32	16x1.5	46	28	54.5	32	17	20	660	4.29 + Z x 0.01821
70	36	82	30	251	134	66	51	36.5	22x1.5	51	30	59	36.5	19	22	440	5.93 + Z x 0.02200
70	40	82	30	251	134	66	51	36.5	22x1.5	51	30	59	36.5	19	22	570	5.93 + Z x 0.02380
70	45	82	30	251	134	66	51	36.5	22x1.5	51	30	59	36.5	19	22	750	5.94 + Z x 0.02630
80	40	92	30	264	145	68	51	36.5	22x1.5	55	31	64	36.5	19	22	470	7.57 + Z x 0.02600
80	45	92	30	264	145	68	51	36.5	22x1.5	55	31	64	36.5	19	22	630	7.59 + Z x 0.02850
80	50	92	30	264	145	68	51	36.5	22x1.5	55	31	64	36.5	19	22	810	7.60 + Z x 0.03140
90	45	102	35	296	156	79	61	41	22x1.5	61	34	73	41	21	25	530	10.12 + Z x 0.03050
90	50	102	35	296	156	79	61	41	22x1.5	61	34	73	41	21	25	690	10.13 + Z x 0.03340
90	55	102	35	296	156	79	61	41	22x1.5	61	34	73	41	21	25	870	10.16 + Z x 0.03660
90	63	102	35	296	156	79	61	41	22x1.5	61	34	73	41	21	25	1190	10.18 + Z x 0.04250
100	50	115	40	335	177	89	69	46	22x1.5	69	38	79.5	46	23	28	590	14.59 + Z x 0.04250
100	55	115	40	335	177	89	69	46	22x1.5	69	38	79.5	46	23	28	750	14.62 + Z x 0.04570
100	63	115	40	335	177	89	69	46	22x1.5	69	38	79.5	46	23	28	1030	14.59 + Z x 0.05160
100	70	115	40	335	177	89	69	46	22x1.5	69	38	79.5	46	23	28	1320	14.68 + Z x 0.05730
110	55	125	45	364	190	97	77	51	22x1.5	77	43	84.5	51	27	32	650	18.87 + Z x 0.04820
110	63	125	45	364	190	97	77	51	22x1.5	77	43	84.5	51	27	32	910	18.90 + Z x 0.05410
110	70	125	45	364	190	97	77	51	22x1.5	77	43	84.5	51	27	32	1170	18.93 + Z x 0.05980

Piston rod lift according to the customer's wish.
Lifts higher than maximum recommended need to be controlled for the ultimate strength.

The articulated bearing is designed also for lubrication with the pin.

The weights are informative within scope of ± 5% in kg.

EH

Ordering code

For standard linear hydraulic motors

EH Series

Acc. to the table on page 11.

EH – [ ] / [ ] x [ ] – [ ]

Pressure inlets position to the welded-on eye on cylinder surface – according to herein presented drawings

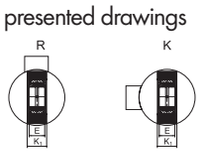

Lift – due to Your actual need – it is necessary to check the maximal possible lift because of the ultimate strength – the diagram of ultimate strength can be helpful according to Euler page 93.

Piston rod diameter

∅D	∅d	∅D_1	∅d_1	L
40	22	50	20	177
40	25	50	20	177
40	28	50	20	177

Rated diameter of cylinder

∅D	∅d	∅D_1	∅d_1	L
40	22	50	20	177
40	25	50	20	177
40	28	50	20	177

Example:

EH – 50/28 x 200 – R

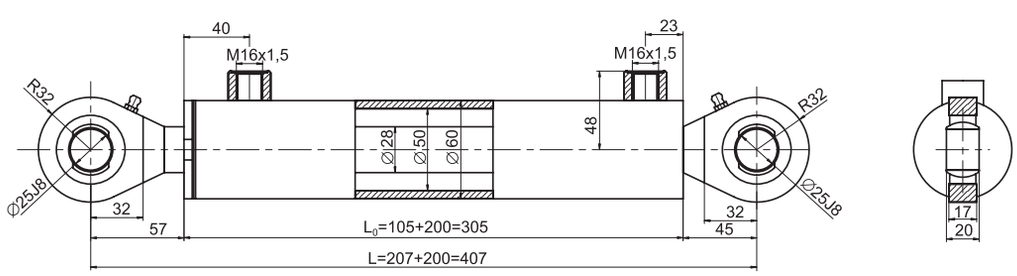

ZH1

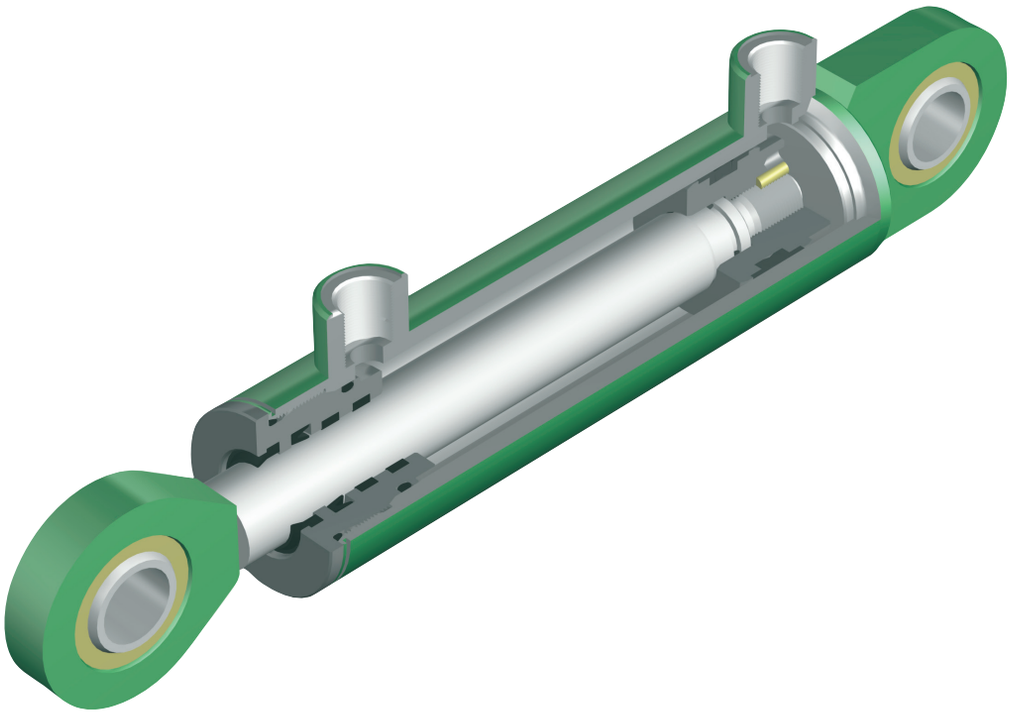

ZH1

Linear hydraulic motors of the ZH1 series

TECHNICAL DESCRIPTION – PRODUCT FUNCTION

The ZH1 linear hydraulic motor is the element that converts the pressure energy to the mechanical energy – to the xial power of the piston rod in both directions. They have – by their construction – no special demands for service and maintenance. It is necessary to obey the service and technical conditions for perfect and secure function of the motor.
The ZH1 hydraulic motor is composed of the tube with precision worked inner diameter within the H8 allowance. On the tube there are welded the connection necks for inlet of the pressure oil with internal thread and the plug together with solid cylinder eye.
Both the cylinder eye and piston rod eye are equipped with the knuckle bearing. The lid for piston rod guidance with the sealing elements is screwed into the tube of cylinder cover. On the grinded – polished and chromed piston rod with the dimension tolerance f7 there is the connection eye welded from one side and the second end is equipped with the piston.

OPERATING CONDITIONS

The linear hydraulic motors of this kind do not require any special demands for service and maintenance.

- the mounting of LHM must be done under conditions preventing the damage of function parts and which secure the protection of inner space against penetration of impurities
- properly provide the connection of LHM to the pressure source (danger of oil pressure decrease) and the mounting of LHM into the kinematic system of the given machine/device
- the work position of LHM is optional if not otherwise specified
- radial load of the piston rod by external force or its rotation during working time are not allowed
- take care during the work to prevent the mechanical damages of the piston rod
- the hydraulic motor must not be loaded in the end positions by external force or by power of steady mass corresponding to 1,25 multiple of rated pressure
- when mounted into the machine's mechanical parts (or into some device) the possibility of swiveling of hydraulic cylinder body must be secured in transverse direction in the area of allowed swiveling of knuckle bearing
- LHM must not be exposed to any aggressive agents, aggressiveness of which would exceed the guaranteed resistance value for the motor piston rod used. The resistance value is specified in technical conditions.

TECHNICAL CONDITIONS

Work liquid	– hydraulic mineral oil (OH-HM 32, OH-HM 46, OH-HM 64)
Required filtration	– min. 40 µm, we recommend 25 µm
Temperature scope	– liquid -20°C ÷ +80°C
	– ambient -20°C ÷ +70°C
Climatic stability	– temperate climate Wt
Rated pressure	– 16 MPa
Maximum pressure	– 20 MPa
Test pressure	– 25 MPa
Work speed	– maximum 0,5 $m \cdot s^{-1}$
The piston rod resistance value in the salt chamber pursuant to ISO 4540	– 120 hours

MARKING

Each hydraulic motor manufactured in our factory is marked with following data:

HYDRAULICS SEHRADICE
ZH1 D/d x Z R / K /
MAX.OPERATING PRESSURE
SERIAL NUMBER

Part of the item delivery is the accompanying documentation containing

ITEM SAFEGUARD and
QUALITY CERTIFICATE /document details see page no. 97-98/.

ZH1 Series for P_{max} 20 MPa

Position of the screws joint to the swing plane

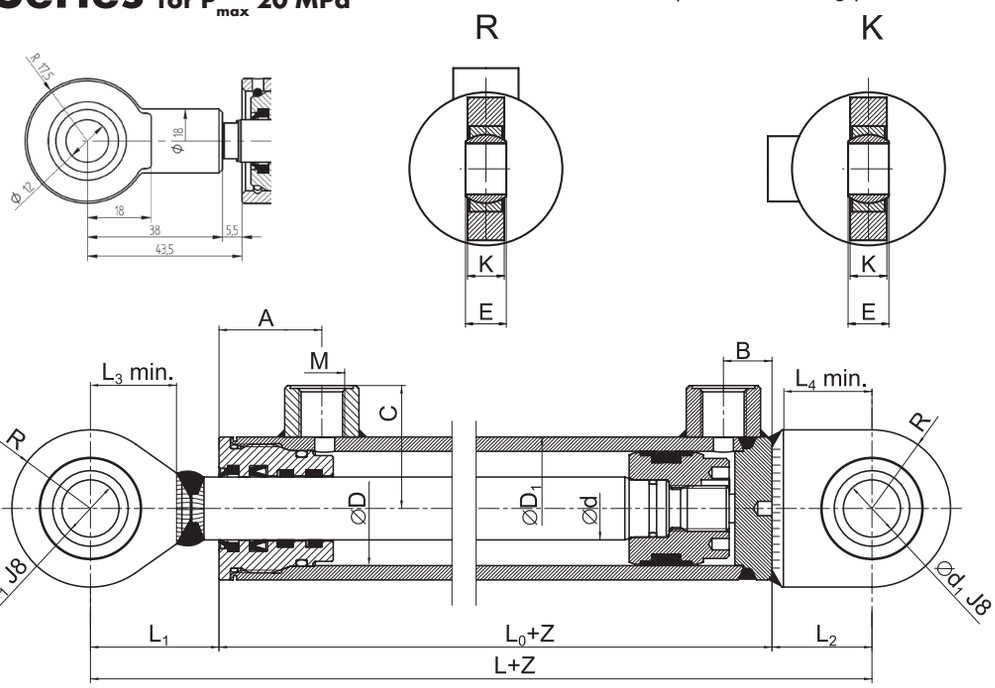

ØD	Ød	$ØD_1$	$Ød_1$	L	L_0	L_1	L_2	L_3 ± 1	L_4 ± 1	M	A	B	C	E	K	R	Maximum recom. lift acc. to selected Ød	Weight under given lift Z
25	12	35	12	142	80	44	18		23	10x1	36	15	29.5	10	9	17.5	90	0.70 + Z x 0.00656
25	14	35	12	142	80	44	18		23	10x1	36	15	29.5	10	9	17.5	150	0.72 + Z x 0.00656
32	18	42	20	170	90	45	35	32	31	12x1.5	36	17	39	16	14	27.5	210	1.50 + Z x 0.00656
32	20	42	20	170	90	45	35	32	31	12x1.5	36	17	39	16	14	27.5	270	1.60 + Z x 0.00703
40	22	50	20	170	90	45	35	32	31	16x1.5	36	17	43	16	14	27.5	260	2.00 + Z x 0.00853
40	25	50	20	170	90	45	35	32	31	16x1.5	36	17	43	16	14	27.5	360	2.00 + Z x 0.00940
50	25	60	25	190	102	50	38	33	33	16x1.5	43	16	48	20	18	32.5	260	3.10 + Z x 0.01063
50	28	60	25	190	102	50	38	33	33	16x1.5	43	16	48	20	18	32.5	360	3.00 + Z x 0.01161
63	32	75	25	215	116	57	42	37	37	16x1.5	50	23	55.5	20	18	35	360	5.00 + Z x 0.01652
63	36	75	25	215	116	57	42	37	37	16x1.5	50	23	55.5	20	18	35	480	5.00 + Z x 0.01820
70	36	85	30	235	125	65	45	45	39	22x1.5	54	25	60.5	22	20	42.5	410	7.35 + Z x 0.02232
70	40	85	30	235	125	65	45	45	39	22x1.5	54	25	60.5	22	20	42.5	540	7.20 + Z x 0.02419
80	40	95	30	240	130	65	45	45	39	22x1.5	59	25	65.5	22	20	42.5	450	8.00 + Z x 0.02604
80	45	95	30	240	130	65	45	45	39	22x1.5	59	25	65.5	22	20	42.5	610	9.00 + Z x 0.02806
90	45	105	35	275	140	80	55	54	49	22x1.5	64	27	70.5	25	25	47.5	510	12.00 + Z x 0.03051
90	50	105	35	275	140	80	55	54	49	22x1.5	64	27	70.5	25	25	47.5	660	12.40 + Z x 0.03344
100	50	120	40	300	155	85	60	57	54	27x2	73	31	82	28	25	52.5	570	17.00 + Z x 0.04254
100	55	120	40	300	155	85	60	57	54	27x2	73	31	82	28	25	52.5	720	17.20 + Z x 0.04580
110	55	130	45	345	185	95	65	67	57	27x2	78	38	87	32	30	60	620	23.60 + Z x 0.04824
110	63	130	45	345	185	95	65	67	57	27x2	78	38	87	32	30	60	860	23.90 + Z x 0.05406
125	63	145	50	417	242	105	70	70	62	33x2	95	50	94.5	30	35	62.5	700	36.60 + Z x 0.05700
125	70	145	50	417	242	105	70	70	62	33x2	95	50	94.5	30	35	62.5	920	37.60 + Z x 0.06300
140	70	160	60	457	252	115	90	78	80	33x2	95	61	102	44	40	80	780	51.90 + Z x 0.06700
140	80	160	60	457	252	115	90	78	80	33x2	95	61	102	44	40	80	1080	52.90 + Z x 0.07600
160	80	180	70	510	280	130	100	87	85	33x2	105	68	112	49	45	90	890	72.80 + Z x 0.08100
160	90	180	70	510	280	130	100	87	85	33x2	105	68	112	49	45	90	1200	74.20 + Z x 0.09200
180	90	210	90	547	262	155	130	113	113	42x2	100	75	130	60	55	110	1020	101.90 + Z x 0.12200
180	100	210	90	547	262	155	130	113	113	42x2	100	75	130	60	55	110	1320	107.50 + Z x 0.13400
200	100	240	100	602	302	160	140	123	123	42x2	120	85	145	70	60	120	1130	146.30+ Z x 0.17100
200	110	245	100	602	302	160	140	123	123	42x2	120	85	145	70	60	120	1440	147.80 + Z x 0.18400

Piston rod lift according to the customer's wish.
Lifts higher than maximum recommended need to be controlled for the ultimate strength.
The articulated bearing is designed also for lubrication with the pin.
The weights are informative within scope of ± 5% in kg.

ZH1

ZH1 Series hydraulic motors gripping

Gripping ZH1–A

ZH1-AS

Cylinder	D_1	D_2	B	Ød	X	Y	n	L_0	L_{OS}	B_S
25	55	40	8	6.4			4	80		
32	67	50	10	8.4			4	90	115	42
40	98	80	12	8.4			6	90	115	42
50	113	95	13	10.5			6	102	137	51
63	138	115	15	13			6	116	153	60
70	148	120	15	13			6	125	162	62
80	168	140	18	15			6	130	174	69
90	178	150	20	15			6	140	187	74
100	200	170	20	17			6	155	207	83
110	210	180	22	17			6	185	243	96
125	240		25	17	90	180	8	242	294	102
140	265		28	21	90	210	8	252	294	103
160	280		28	25	120	230	8	280	319	107
180	295		35	25	130	250	8	262	307	120
200	350		35	31	150	290	8	302	347	130

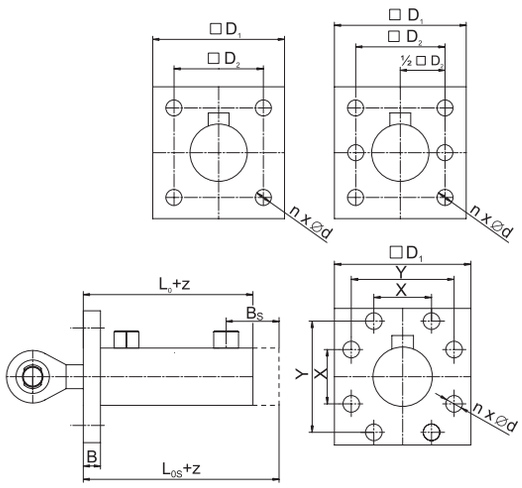

Gripping ZH1–B

ZH1-BS

Cylinder	$ØD_1$	$ØD_2$	B	d	n	L_0	L_{OS}	B_S
25	75	60	8	6.4	4	80		
32	88	70	10	8.4	4	90	115	42
40	98	80	12	8.4	6	90	115	42
50	113	95	13	10.5	6	102	137	51
63	138	115	15	13	6	116	153	60
70	148	120	15	13	6	125	162	62
80	168	140	18	15	6	130	174	69
90	178	150	20	15	6	140	187	74
100	198	170	20	17	6	155	207	83
110	208	180	22	17	6	185	243	96
125	237	205	25	17	8	242	294	102
140	267	230	28	21	8	252	294	103
160	305	260	28	25	8	280	319	107
180	330	285	35	25	8	262	307	120
200	380	330	35	31	8	302	347	130

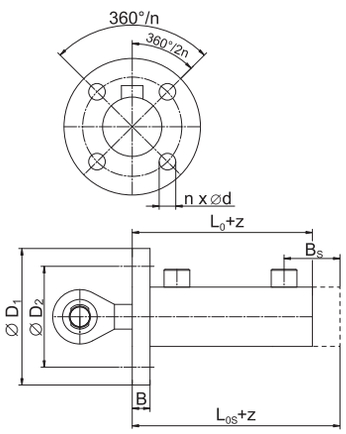

Gripping ZH1–C

ZH1-CS

Cylinder	A	B h11	C	d f8	E	F	Gx45°	H	K	L_0	L_{OS}	B_S
25	70	45	23	15	45	12.5	1	5	17	80		
32	90	55	28	20	53	17.5	1	5	19	90	115	42
40	105	65	28	20	65	20	1	5	19	90	115	42
50	120	80	33	25	80	20	1	5	22	102	137	51
63	150	100	40	30	100	25	1.5	7	27	116	153	60
70	160	110	40	30	105	25	1.5	7	27	125	162	62
80	185	125	45	35	115	30	1.5	8	31	130	174	69
90	205	135	50	40	135	35	1.5	8	33	140	187	74
100	220	150	55	45	150	35	1.5	10	38	155	207	83
110	240	160	60	50	160	40	1.5	10	40	185	243	96
125	295	195	80	60	195	60	2	10	50	242	294	102
140	335	215	90	70	215	60	2	15	60	252	294	103
160	380	240	100	80	240	70	2	18	68	280	319	107
180	420	260	110	90	260	80	2	20	75	262	307	120
200	480	300	120	100	300	90	2	25	85	302	307	130

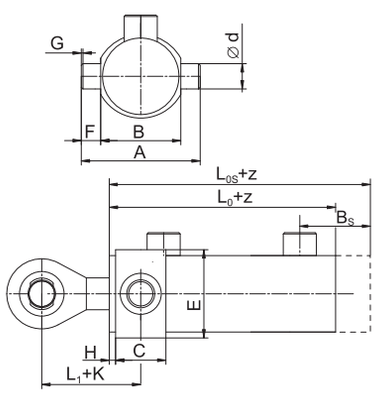

Gripping ZH1–D

ZH1-DS

Cylinder	B	C	Ød	E	F	G	H	L_0	L_{OS}	C_S	B_S
25	20	15	8.4	55	73	10	23	80			
32	20	15	10.5	65	88	10	27	90	115	40	42
40	24	20	10.5	75	100	12	31	90	115	45	42
50	24	20	13	88	110	14	38	102	137	55	51
63	30	25	15	110	138	18	50	116	153	62	60
70	34	27	17	118	150	20	55	125	162	64	62
80	40	30	21	140	180	24	60	130	174	74	69
90	40	30	21	150	190	24	65	140	187	77	74
100	48	34	25	170	215	26	75	155	207	86	83
110	48	34	25	180	230	26	80	185	243	92	96

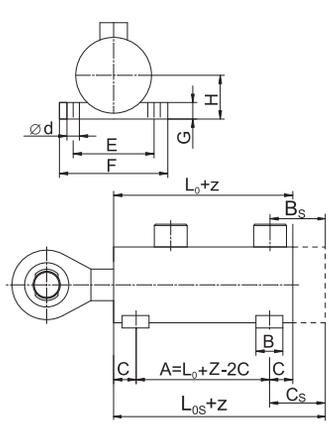

Dimensions LOS, BS and CS apply to the LHM design with a screwed plug.

ZH2

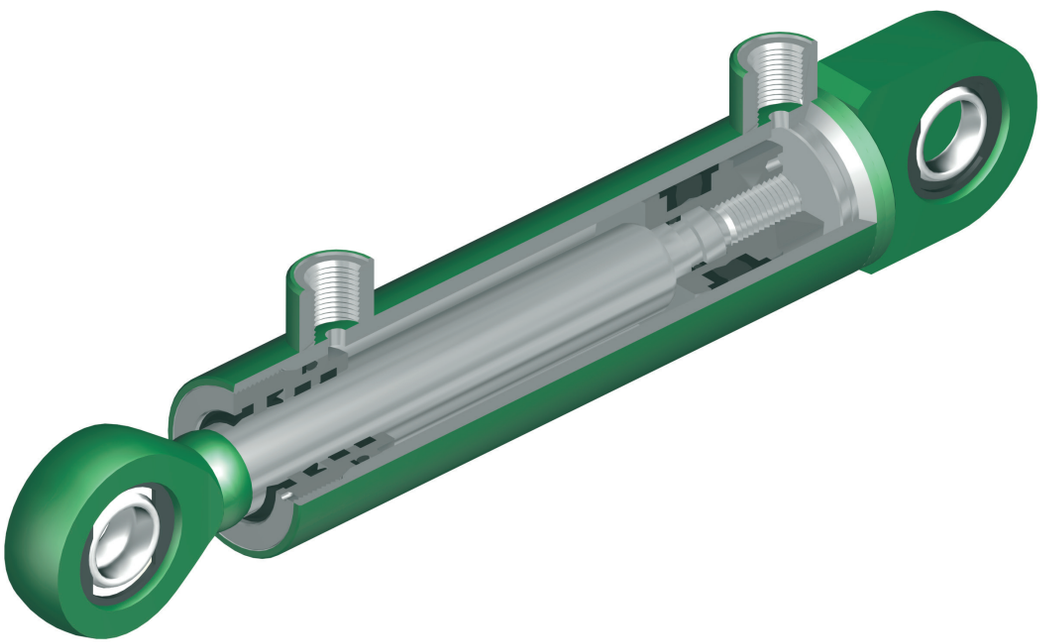

Linear hydraulic motors of the ZH2 series

ZH2

TECHNICAL DESCRIPTION – PRODUCT FUNCTION

The ZH2 linear hydraulic motor is the element that converts the pressure energy to the mechanical energy – to the axial power of the piston rod in both directions. They have – by their construction – no special demands for service and maintenance. It is necessary to obey the service and technical conditions for perfect and secure function of the motor.
The ZH2 hydraulic motor is composed of the tube with precision worked inner diameter within the H8 allowance. On the tube there are welded the connection necks for inlet of the pressure oil with internal thread and the plug together with solid cylinder eye.
Both the cylinder eye and piston rod eye are equipped with the knuckle bearing. The lid for piston rod guidance with the sealing elements is screwed into the tube of cylinder cover. On the grinded – polished and chromed piston rod with the dimension tolerance f7 there is the connection eye welded from one side and the second end is equipped with the piston.

OPERATING CONDITIONS

The linear hydraulic motors of this kind do not require any special demands for service and maintenance.

- the mounting of LHM must be done under conditions preventing the damage of function parts and which secure the protection of inner space against penetration of impurities
- properly provide the connection of LHM to the pressure source (danger of oil pressure decrease) and the mounting of LHM into the kinematic system of the given machine/device
- the work position of LHM is optional if not otherwise specified
- radial load of the piston rod by external force (or its radial force, caused by the LHM camber of own weight) during working time are not allowed
- take care during the work to prevent the mechanical damages of the piston rod
- the hydraulic motor must not be loaded in the end positions by external force or by power of steady mass corresponding to 1,25 multiple of rated pressure
- when mounted into the machine's mechanical parts (or into some device) the possibility of swiveling of hydraulic cylinder body must be secured in transverse direction in the area of allowed swiveling of knuckle bearing
- LHM must not be exposed to any aggressive agents, aggressiveness of which would exceed the guaranteed resistance value for the motor piston rod used. The resistance value is specified in technical conditions.

TECHNICAL CONDITIONS

Work liquid	– hydraulic mineral oil (OH-HM 32, OH-HM 46, OH-HM 64)
Required filtration	– min. 40 μm, we recommend 25 μm
Temperature scope	– liquid -20°C ÷ +80°C
	– ambient -20°C ÷ +70°C
Climatic stability	– temperate climate WT
Rated pressure	– 20 MPa
Maximum pressure	– 25 MPa
Test pressure	– 32 MPa
Work speed	– maximum 0,5 $m \cdot s^{-1}$
The piston rod resistance value in the salt chamber pursuant to ISO 4540	– 120 hours

MARKING

Each hydraulic motor manufactured in our factory is marked with following data:

HYDRAULICS SEHRADICE
ZH2 D/d x Z R / K /
MAX.OPERATING PRESSURE
SERIAL NUMBER

Part of the item delivery is the accompanying documentation containing

ITEM SAFEGUARD and
QUALITY CERTIFICATE /document details see page no. 97-98/.

ZH2 Series

for Pmax 25 MPa

Position of the screws joint to the swing plane

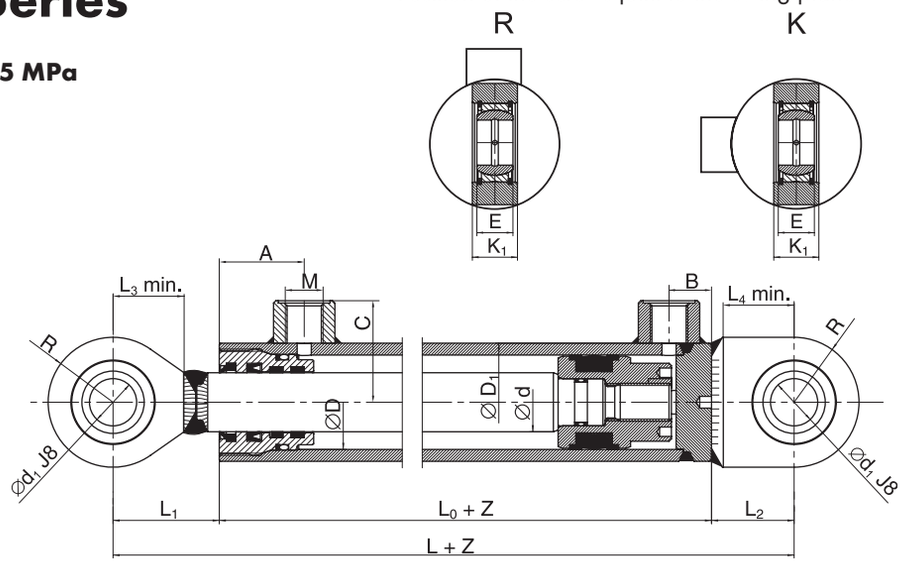

ØD	Ød	ØD1	Ød1	L	L0	L1	L2	L3 ± 1	L4 ± 1	M	A	B	C	E	K1	R	Maximum recom. lift acc. to selected Ød	Weight under given lift Z
32	18	42	20	175	95	45	35	30	30	12x1.5	36	18	39	16	20	27.5	170	1.80 + Z x 0.00656
32	20	42	20	175	95	45	35	30	30	12x1.5	36	18	39	16	20	27.5	230	1.80 + Z x 0.00703
40	22	50	20	185	105	45	35	30	30	16x1.5	36	18	43	16	20	27.5	220	2.05 + Z x 0.00853
40	25	50	20	185	105	45	35	30	30	16x1.5	36	18	43	16	20	27.5	310	2.05 + Z x 0.00940
45	25	55	25	190	102	50	38	33	33	16x1.5	41	18	45.5	20	25	32.5	260	2.50 + Z x 0.01000
45	28	55	25	190	102	50	38	33	33	16x1.5	41	18	45.5	20	25	32.5	350	3.15 + Z x 0.01100
50	25	62	25	205	117	50	38	33	33	16x1.5	43	21	49	20	25	32.5	220	3.50 + Z x 0.01214
50	28	62	25	205	117	50	38	33	33	16x1.5	43	21	49	20	25	32.5	300	3.50 + Z x 0.01312
55	28	70	25	215	116	57	42	37	36	16x1.5	45	20	53	20	25	35	260	4.18 + Z x 0.01640
55	32	70	25	215	116	57	42	37	36	16x1.5	45	20	53	20	25	35	370	4.60 + Z x 0.01787
60	32	75	25	225	126	57	42	37	36	16x1.5	48	25	55.5	20	25	35	330	5.50 + Z x 0.01880
60	36	75	25	225	126	57	42	37	36	16x1.5	48	25	55.5	20	25	35	440	5.55 + Z x 0.02047
63	36	78	30	240	130	65	45	44	39	16x1.5	50	27	57	22	28	42.5	410	6.50 + Z x 0.02103
63	40	78	30	240	130	65	45	44	39	16x1.5	50	27	57	22	28	42.5	530	7.00 + Z x 0.02290
65	36	80	30	240	130	65	45	44	39	22x1.5	53	24	58	22	28	42.5	390	7.00 + Z x 0.02140
65	40	80	30	240	130	65	45	44	39	22x1.5	53	24	58	22	28	42.5	510	7.00 + Z x 0.02327
70	40	85	30	260	150	65	45	44	39	22x1.5	54	33	60.5	22	28	42.5	460	8.90 + Z x 0.02420
70	45	85	30	260	150	65	45	44	39	22x1.5	54	33	60.5	22	28	42.5	610	8.95 + Z x 0.02680
75	40	90	35	280	150	75	55	53	48	22x1.5	57	30	63	25	30	47.5	410	10.30 + Z x 0.02512
75	45	90	35	280	150	75	55	53	48	22x1.5	57	30	63	25	30	47.5	550	10.50 + Z x 0.02774
80	45	95	35	290	155	80	55	53	48	22x1.5	59	33	65.5	25	30	47.5	510	11.70 + Z x 0.02866
80	50	95	35	290	155	80	55	53	48	22x1.5	59	33	65.5	25	30	47.5	660	11.80 + Z x 0.03160
90	50	105	40	310	165	85	60	57	53	22x1.5	64	35	70.5	28	35	52.5	560	15.20 + Z x 0.03344
90	55	105	40	310	165	85	60	57	53	22x1.5	64	35	70.5	28	35	52.5	710	15.60 + Z x 0.03668
100	55	120	45	340	180	95	65	67	57	27x2	73	38	82	32	38	60	610	21.80 + Z x 0.04578
100	63	120	45	340	180	95	65	67	57	27x2	73	38	82	32	38	60	850	22.10 + Z x 0.05160
110	63	130	50	360	185	105	70	70	62	27x2	78	38	87	35	40	62.5	750	26.00 + Z x 0.05406
110	70	130	50	360	185	105	70	70	62	27x2	78	38	87	35	40	62.5	960	26.24 + Z x 0.05980
125	63	155	60	470	260	120	90	78	75	33x2	100	60	99.5	44	50	80	580	52.75 + Z x 0.07700
125	70	155	60	470	260	120	90	78	75	33x2	100	60	99.5	44	50	80	770	53.44 + Z x 0.08300
140	70	170	70	500	270	130	100	85	85	33x2	100	70	107	49	55	90	650	67.25 + Z x 0.08800
140	80	170	70	500	270	130	100	85	85	33x2	100	70	107	49	55	90	920	68.32 + Z x 0.09600
160	80	190	80	550	290	150	110	100	90	42x2	105	80	120	55	60	100	750	94.10 + Z x 0.10400
160	90	190	80	550	290	150	110	100	90	42x2	105	80	120	55	60	100	1025	95.60 + Z x 0.11500
180	90	210	90	600	310	160	130	110	110	42x2	110	85	130	60	70	110	860	122.38 + Z x 0.12200
180	100	210	90	600	310	160	130	110	110	42x2	110	85	130	60	70	110	1130	123.68 + Z x 0.13400
200	100	245	100	640	330	170	140	120	120	42x2	120	90	147.5	70	75	120	960	169.30 + Z x 0.18500
200	110	245	100	640	330	170	140	120	120	42x2	120	90	147.5	70	75	120	1230	171.64 + Z x 0.19800

Piston rod lift according to the customer's wish.
Lifts higher than maximum recommended need to be controlled for the ultimate strength.

The articulated bearing is designed also for lubrication with the pin.

The weights are informative within scope of ± 5% in kg.

ZH2 Series hydraulic motors gripping

Gripping ZH2–A

ZH2-AS

Cylinder	D_1	D_2	B	Ød	X	Y	n	L_0	L_{OS}	B_S
32	67	50	10	8.4			4	95	118	41
40	98	80	12	8.4			6	105	128	41
45	103	85	12	10.5			6	102	130	46
50	113	95	13	10.5			6	117	146	50
55	118	100	13	10.5			6	116	152	56
60	128	108	13	10.5			6	126	160	59
63	138	115	15	13			6	130	160	57
65	138	115	15	13			6	130	165	59
70	148	120	15	13			6	150	178	61
75	155	130	16	15			6	150	184	64
80	168	140	18	15			6	155	190	68
90	178	150	20	15			6	165	203	73
100	200	170	20	17			6	180	224	82
110	210	180	22	17			6	185	236	89
125	240		25	17	90	180	8	260	302	102
140	265		28	21	90	210	8	270	302	102
160	280		28	25	120	230	8	290	319	109
180	295		35	25	130	250	8	310	341	116
200	350		35	31	150	290	8	330	364	124

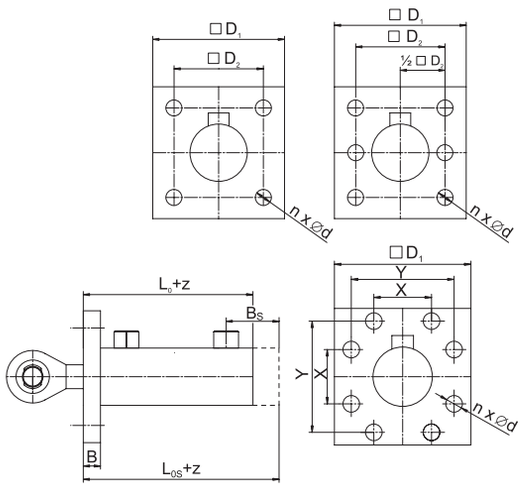

Gripping ZH2–B

ZH2-BS

Cylinder	ØD1	ØD2	B	d	n	L_0	L_{OS}	B_S
32	88	70	10	8.4	4	95	118	41
40	98	80	12	8.4	6	105	128	41
45	103	85	12	8.4	6	102	130	46
50	113	95	13	10.5	6	117	146	50
55	118	100	13	10.5	6	116	152	56
60	128	108	13	10.5	6	126	160	59
63	138	115	15	13	6	130	160	57
65	138	115	15	13	6	130	165	59
70	148	120	15	13	6	150	178	61
75	155	130	16	13	6	150	184	64
80	168	140	18	15	6	155	190	68
90	178	150	20	15	6	165	203	73
100	198	170	20	17	6	180	224	82
110	208	180	22	17	6	185	236	89
125	237	205	25	17	8	260	302	102
140	267	230	28	21	8	270	302	102
160	305	260	28	25	8	290	319	109
180	330	285	35	25	8	310	341	116
200	380	330	35	31	8	330	364	124

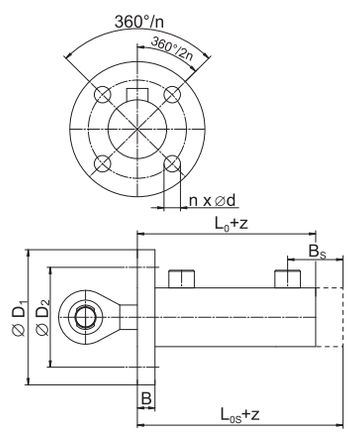

Gripping ZH2–C

ZH2-CS

Cylinder	A	B h11	C	d f8	E	F	Gx45°	H	K	L_0	L_{OS}	B_S
32	90	55	28	20	53	17.5	1	5	19	95	118	41
40	105	65	28	20	65	20	1	5	19	105	128	41
45	110	70	33	25	70	20	1	5	22	102	130	46
50	120	80	33	25	80	20	1	5	22	117	146	50
55	135	90	35	25	90	22.5	1	5	23	116	152	56
60	140	95	35	25	95	22.5	1	7	25	126	160	59
63	150	100	40	30	100	25	1.5	7	27	130	160	57
65	155	105	40	30	100	25	1.5	7	27	130	165	59
70	160	110	40	30	105	25	1.5	7	27	150	178	61
75	180	120	45	35	115	30	1.5	7	30	150	184	64
80	185	125	45	35	115	30	1.5	8	31	155	190	68
90	205	135	50	40	135	35	1.5	8	33	165	203	73
100	220	150	55	45	150	35	1.5	10	38	180	224	82
110	240	160	60	50	160	40	1.5	10	40	185	236	89
125	295	195	80	60	195	50	2	10	50	260	302	102
140	335	215	90	70	215	60	2	15	60	270	302	102
160	380	240	100	80	240	70	2	18	68	290	319	109
180	420	260	110	90	260	80	2	20	75	310	341	116
200	480	300	120	100	300	90	2	25	85	330	364	124

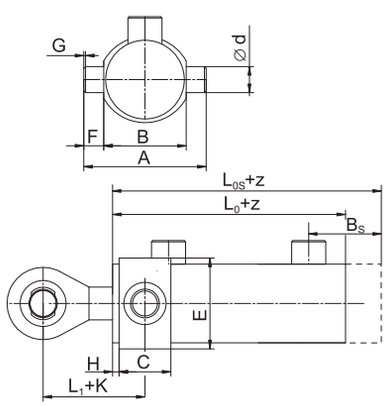

Gripping ZH2–D

ZH2-DS

Cylinder	B	C	Ød	E	F	G	H	L_0	L_{OS}	C_S	B_S
32	20	15	10.5	65	88	10	27	95	118	38	41
40	24	20	10.5	75	100	12	31	105	128	43	41
45	24	20	13	80	105	12	35	102	130	48	46
50	24	20	13	88	110	14	38	117	146	49	50
55	26	20	13	98	123	16	43	116	152	56	56
60	30	25	15	107	135	16	47	126	160	59	59
63	30	25	15	110	138	18	50	130	160	55	57
65	30	25	15	110	138	18	50	130	165	60	59
70	34	27	17	118	150	20	55	150	178	55	61
75	34	27	17	125	158	20	55	150	184	61	64
80	40	30	21	140	180	24	60	155	190	65	68
90	40	30	21	150	190	24	65	165	203	68	73
100	48	34	25	170	215	26	75	180	224	78	82
110	48	34	25	180	230	26	80	185	236	85	89

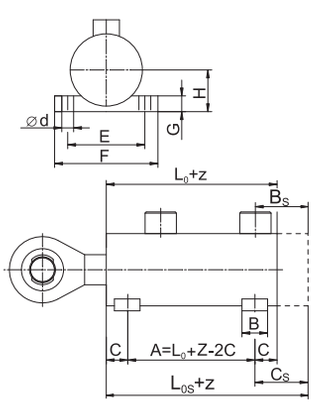

Dimensions L0S, BS and CS apply to the LHM design with a screwed plug.

ZH2

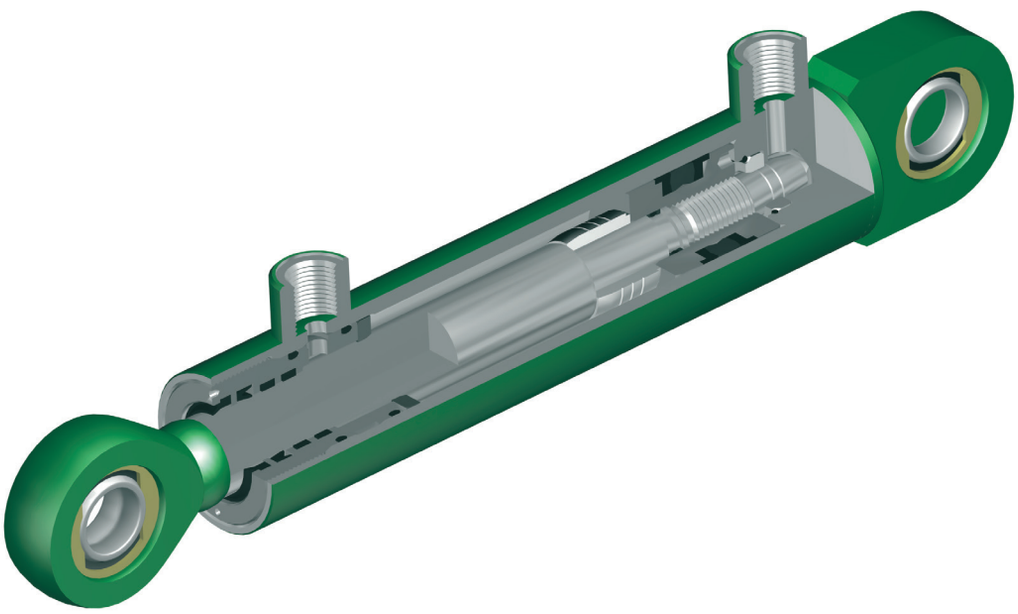

ZH2T

Linear hydraulic motors of the ZH2T series

TECHNICAL DESCRIPTION – PRODUCT FUNCTION

The ZH2T linear hydraulic motor is the element that converts the pressure energy to the mechanical energy – to the axial power of the piston rod in both directions. They have – by their construction – no special demands for service and maintenance. To ensure save and trouble-free operation, operational and technical conditions must be complied with. ZH2T is a hydraulic motor with non-regulated damping (reduction of the piston rod travel speed) in end positions - however, we may not guarantee the efficiency of damping. If precise damping is required, please, select LHM type ZH2RT or ISO 6022.

A hydraulic motor is assembled from a tube with precisely machined internal diameter, tolerance H8. On the tube there are welded the connection necks for inlet of the pressure oil with internal thread and the plug together with solid cylinder eye.

Both the cylinder eye and piston rod eye are equipped with the knuckle bearing as standard. The lid for piston rod guidance with the sealing elements is screwed into the tube of cylinder cover. On the grinded – polished and chromed piston rod with the dimension tolerance f7 there is the connection eye welded from one side and the second end is equipped with the piston.

OPERATING CONDITIONS

The linear hydraulic motors of this kind do not require any special demands for service and maintenance.

- the mounting of LHM must be done under conditions preventing the damage of function parts and which secure the protection of inner space against penetration of impurities
- properly provide the connection of LHM to the pressure source (danger of oil pressure decrease) and the mounting of LHM into the kinematic system of the given machine/device
- the work position of LHM is optional if not otherwise specified
- radial load of the piston rod by external force (or its radial force, caused by the LHM camber of own weight) or its rotations during working time are not allowed
- take care during the work to prevent the mechanical damages of the piston rod
- the hydraulic motor must not be loaded in the end positions by external force or by power of steady mass corresponding to 1,25 multiple of rated pressure
- when mounted into the machine's mechanical parts (or into some device) the possibility of swiveling of hydraulic cylinder body must be secured in transverse direction in the area of allowed swiveling of knuckle bearing
- LHM must not be exposed to any aggressive agents, aggressiveness of which would exceed the guaranteed resistance value for the motor piston rod used. The resistance value is specified in technical conditions.

TECHNICAL CONDITIONS

Work liquid	– hydraulic mineral oil (OH-HM 32, OH-HM 46, OH-HM 64)
Required filtration	– min. 40 μm, we recommend 25 μm
Temperature scope	– liquid -20°C ÷ +80°C
	– ambient -20°C ÷ +70°C
Climatic stability	– temperate climate WT
Rated pressure	– 20 MPa
Maximum pressure	– 25 MPa
Test pressure	– 32 MPa
Work speed	– maximum 0,5 $m \cdot s^{-1}$
The piston rod resistance value in the salt chamber pursuant to ISO 4540	– 120 hours

MARKING

Each hydraulic motor manufactured in our factory is marked with following data:

HYDRAULICS SEHRADICE
ZH2T D/d x Z R / K /
MAX.OPERATING PRESSURE
SERIAL NUMBER

Part of the item delivery is the accompanying documentation containing

ITEM SAFEGUARD and
QUALITY CERTIFICATE /document details see page no. 97-98/.

ZH2T Series for P_{max} 25 MPa

Cap-eye solution for ∅32.

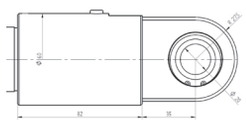

Position of the screws joint to the swing plane

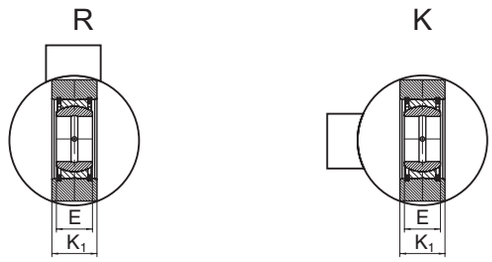

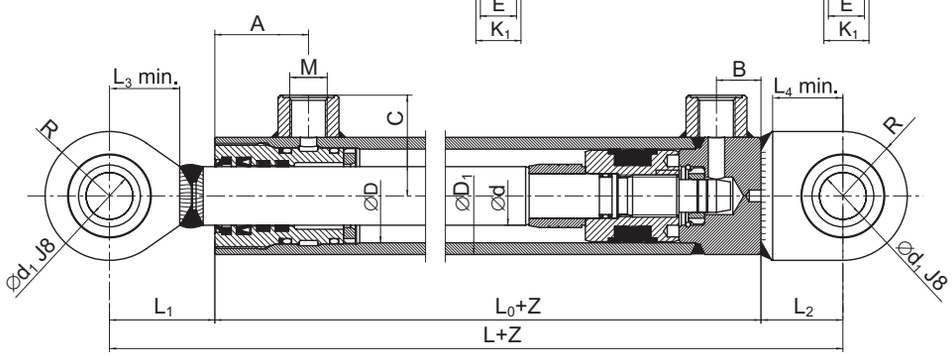

∅D	∅d	∅D_1	∅d_1	L	L_0	L_1	L_2	L_3 ± 1	L_4 ± 1	M	A	B	C	E	K_1	R	Maximum recom. lift acc. to selected ∅d	Weight under given lift Z
32	18	42	20	205	125	45	35	30	30	12x1,5	42	10	39	16	20	27,5	160	2,00 + Z x0,00656
32	20	42	20	205	125	45	35	30	30	12x1,5	42	10	39	16	20	27,5	220	2,00 + Z x0,00703
40	22	50	20	215	135	45	35	30	30	16x1,5	42	15	43	16	20	27,5	200	2,70 + Z x0,00853
40	25	50	20	215	135	45	35	30	30	16x1,5	42	15	43	16	20	27,5	290	2,90 + Z x0,00940
45	25	55	25	225	137	50	38	33	33	16x1,5	45	16	45,5	20	25	32,5	240	3,15 + Z x0,01000
45	28	55	25	225	137	50	38	33	33	16x1,5	45	16	45,5	20	25	32,5	340	3,31 + Z x0,01100
50	25	62	25	250	162	50	38	33	33	16x1,5	48	16	49	20	25	32,5	200	4,60 + Z x0,01214
50	28	62	25	250	162	50	38	33	33	16x1,5	48	16	49	20	25	32,5	280	4,70 + Z x0,01312
55	28	70	25	260	161	57	42	37	36	16x1,5	50	17	53	20	25	35	240	4,39 + Z x0,01640
55	32	70	25	260	161	57	42	37	36	16x1,5	50	17	53	20	25	35	350	4,57 + Z x0,01787
60	32	75	25	265	166	57	42	37	36	16x1,5	53	16	55,5	20	25	35	310	5,78 + Z x0,01880
60	36	75	25	265	166	57	42	37	36	16x1,5	53	16	55,5	20	25	35	420	6,83 + Z x0,02047
63	36	78	30	285	175	65	45	44	39	16x1,5	58	16	57	22	28	42,5	390	7,35 + Z x0,02103
63	40	78	30	285	175	65	45	44	39	16x1,5	58	16	57	22	28	42,5	510	7,58 + Z x0,02290
65	36	80	30	290	180	65	45	44	39	22x1,5	58	22	58	22	28	42,5	370	8,55 + Z x0,02140
65	40	80	30	290	180	65	45	44	39	22x1,5	58	22	58	22	28	42,5	490	8,66 + Z x0,02327
70	40	85	30	295	185	65	45	44	39	22x1,5	58	23	60,5	22	28	42,5	440	9,35 + Z x0,02420
70	45	85	30	295	185	65	45	44	39	22x1,5	58	23	60,5	22	28	42,5	600	9,56 + Z x0,02680
75	40	90	35	335	205	75	55	53	48	22x1,5	63	23	63	25	30	47,5	380	10,82 + Z x0,02512
75	45	90	35	335	205	75	55	53	48	22x1,5	63	23	63	25	30	47,5	530	11,03 + Z x0,02774
80	45	95	35	340	205	80	55	53	48	22x1,5	65	25	65,5	25	30	47,5	480	14,10 + Z x0,02866
80	50	95	35	340	205	80	55	53	48	22x1,5	65	25	65,5	25	30	47,5	630	15,00 + Z x0,03160
90	50	105	40	375	230	85	60	57	53	22x1,5	70	28	70,5	28	35	52,5	530	18,50 + Z x0,03344
90	55	105	40	375	230	85	60	57	53	22x1,5	70	28	70,5	28	35	52,5	680	19,50 + Z x0,03668
100	55	120	45	410	250	95	65	67	57	27x2	80	30	82	32	38	60	570	27,00 + Z x0,04578
100	63	120	45	410	250	95	65	67	57	27x2	80	30	82	32	38	60	810	27,50 + Z x0,05160
110	63	130	50	430	255	105	70	70	62	27x2	85	30	87	35	40	62,5	710	28,88 + Z x0,05406
110	70	130	50	430	255	105	70	70	62	27x2	85	30	87	35	40	62,5	930	30,50 + Z x0,05980
125	63	155	60	510	300	120	90	78	75	33x2	104	32	99,5	44	50	80	560	58,50 + Z x 0,07700
125	70	155	60	510	300	120	90	78	75	33x2	104	32	99,5	44	50	80	750	59,50 + Z x0,08300
140	70	170	70	540	310	130	100	85	85	33x2	110	32	107	49	55	90	630	74,00 + Z x0,08800
140	80	170	70	540	310	130	100	85	85	33x2	110	32	107	49	55	90	900	75,20 + Z x0,09600
160	80	190	80	605	345	150	110	100	90	42x2	120	40	120	55	60	100	730	105,50 + Z x0,10400
160	90	190	80	605	345	150	110	100	90	42x2	120	40	120	55	60	100	1000	107,70 + Z x0,11500
180	90	210	90	645	365	150	130	110	110	42x2	128	40	130	60	70	110	830	141,00 + Z x0,12200
180	100	210	90	645	365	150	130	110	110	42x2	128	40	130	60	70	110	1100	143,60 + Z x0,13400
200	100	245	100	725	415	170	140	120	120	42x2	155	48	147,5	70	75	120	920	207,20 + Z x0,18500
200	110	245	100	725	415	170	140	120	120	42x2	155	48	147,5	70	75	120	1190	210,00 + Z x0,19800

Piston rod lift according to the customer's wish.
Lifts higher than maximum recommended need to be controlled for the ultimate strength.

The articulated bearing is designed also for lubrication with the pin.

The weights are informative within scope of ± 5% in kg.

ZH2T Series hydraulic motors gripping

Gripping ZH2T–A

ZH2T-AS

Cylinder	D_1	D_2	B	∅d	X	Y	n	L_0	L_{OS}	B_S
32	67	50	10	8,4			4		125	10
40	98	80	12	8,4			6	135	164	40
45	103	85	12	10,5			6	137	169	44
50	113	95	13	10,5			6	162	192	49
55	118	100	13	10,5			6	161	195	52
60	128	108	13	10,5			6	166	204	53
63	138	115	15	13			6	175	215	55
65	138	115	15	13			6	180	215	55
70	148	120	15	13			6	185	221	58
75	155	130	16	15			6	205	242	62
80	168	140	18	15			6	205	242	62
90	178	150	20	15			6	230	277	72
100	200	170	20	17			6	250	296	77
110	210	180	22	17			6	255	310	83
125	240		25	17	90	180	8	300	392	122
140	265		28	21	90	210	8	310	405	125
160	280		28	25	120	230	8	345	437	136
180	295		35	25	130	250	8	365	464	143
200	350		35	31	150	290	8	415	526	143

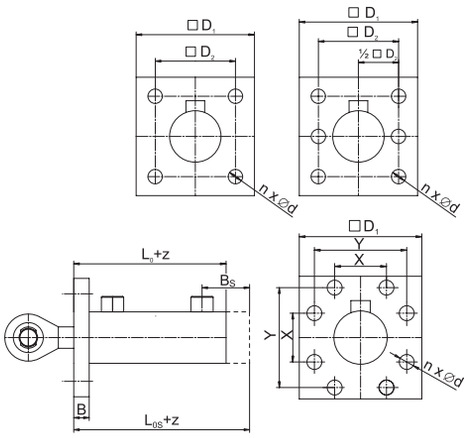

Gripping ZH2T–B

ZH2T-BS

Cylinder	$∅D_1$	$∅D_2$	B	d	n	L_0	L_{OS}	B_S
32	88	70	10	8,4	4		125	10
40	98	80	12	8,4	6	135	164	40
45	103	85	12	8,4	6	137	169	44
50	113	95	13	10,5	6	162	192	49
55	118	100	13	10,5	6	161	195	52
60	128	108	13	10,5	6	166	204	53
63	138	115	15	13	6	175	215	55
65	138	115	15	13	6	180	215	55
70	148	120	15	13	6	185	221	58
75	155	130	16	13	6	205	242	62
80	168	140	18	15	6	205	242	62
90	178	150	20	15	6	230	277	72
100	198	170	20	17	6	250	296	77
110	208	180	22	17	6	255	310	83
125	237	205	25	17	8	300	392	122
140	267	230	28	21	8	310	405	125
160	305	260	28	25	8	345	437	136
180	330	285	35	25	8	365	464	143
200	380	330	35	31	8	415	526	143

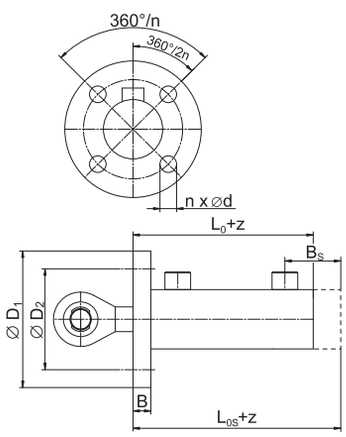

Gripping ZH2T–C

ZH2T-CS

Cylinder	A	B h11	C	d f8	E	F	Gx45°	H	K	L_0	L_{OS}	B_S
32	90	55	28	20	53	17,5	1	5	19		125	10
40	105	65	28	20	65	20	1	5	19	135	164	40
45	110	70	33	25	70	20	1	5	22	137	169	44
50	120	80	33	25	80	20	1	5	22	162	192	49
55	135	90	35	25	90	22,5	1	5	23	161	195	52
60	140	95	35	25	95	22,5	1	7	25	166	204	53
63	150	100	40	30	100	25	1,5	7	27	175	215	55
65	155	105	40	30	100	25	1,5	7	27	180	215	55
70	160	110	40	30	105	25	1,5	7	27	185	221	58
75	180	120	45	35	115	30	1,5	7	30	205	242	62
80	185	125	45	35	115	30	1,5	8	31	205	242	62
90	205	135	50	40	135	35	1,5	8	33	230	277	72
100	220	150	55	45	150	35	1,5	10	38	250	296	77
110	240	160	60	50	160	40	1,5	10	40	255	310	83
125	295	195	80	60	195	60	2	10	50	300	392	122
140	335	215	90	70	215	60	2	15	60	310	405	125
160	380	240	100	80	240	70	2	18	68	345	437	136
180	420	260	110	90	260	80	2	20	75	365	464	143
200	480	300	120	100	300	90	2	25	85	415	526	143

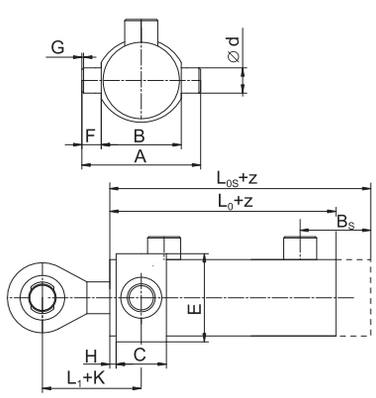

Gripping ZH2T–D

ZH2T-DS

Cylinder	B	C	∅d	E	F	G	H	L_0	L_{OS}	C_S	B_S
32	20	15	10,5	65	88	10	36		125	15	10
40	24	20	10,5	75	100	12	31	135	164	49	40
45	24	20	13	80	105	12	35	137	169	52	44
50	24	20	13	88	110	14	38	162	192	50	49
55	26	20	13	98	123	16	43	161	195	54	52
60	30	25	15	107	135	16	47	166	204	63	53
63	30	25	15	110	138	18	50	175	215	65	55
65	30	25	15	110	138	18	50	180	215	60	55
70	34	27	17	118	150	20	55	185	221	63	58
75	34	27	17	125	158	20	55	205	242	64	62
80	40	30	21	140	180	24	60	205	242	67	62
90	40	30	21	150	190	24	65	230	277	77	72
100	48	34	25	170	215	26	75	250	296	80	77
110	48	34	25	180	230	26	80	255	310	89	83

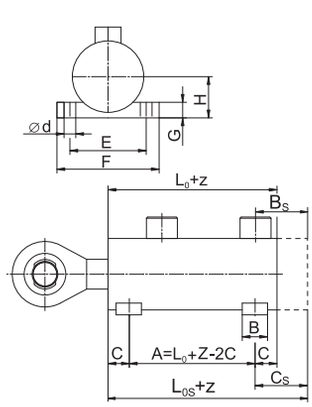

Dimensions L0S, BS and CS apply to the LHM design with a screwed plug.

ZH2T

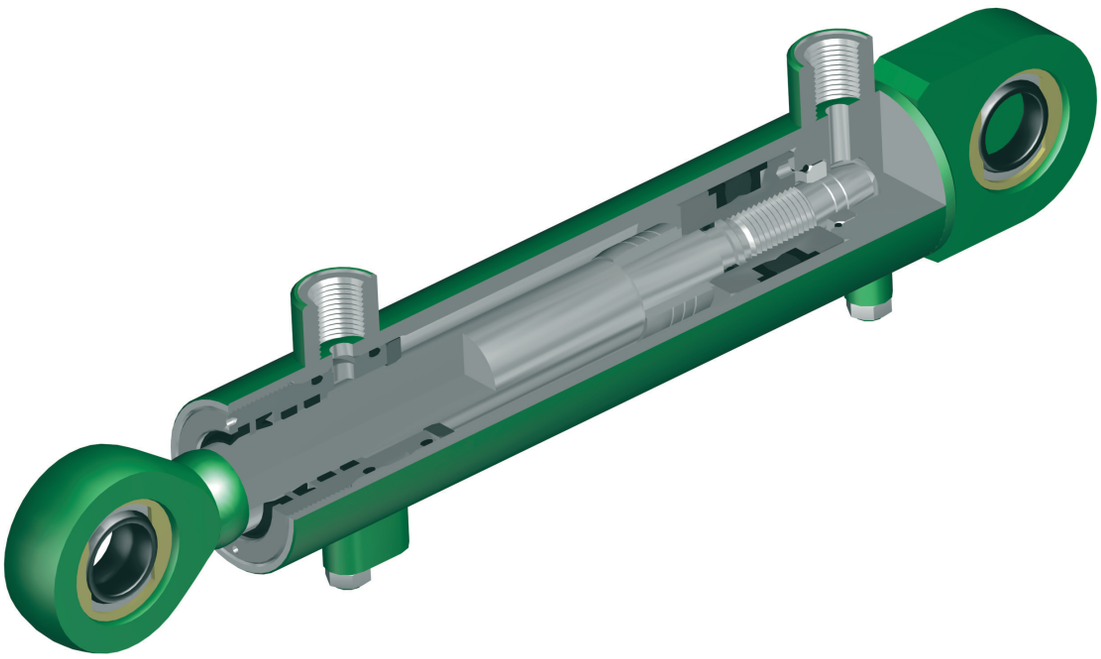

ZH2RT

Linear hydraulic motors of the ZH2RT series

TECHNICAL DESCRIPTION – PRODUCT FUNCTION

The ZH2RT linear hydraulic motor is the element that converts the pressure energy to the mechanical energy – to the axial power of the piston rod in both directions. They have – by their construction – no special demands for service and maintenance. It is necessary to obey the service and technical conditions for perfect and secure functionality.
The ZH2RT is a hydraulic motor with regulated dumping (decrease of the piston rod run) at end positions.
It is composed of the tube with precision worked inner diameter within the H8 allowance. On the tube there are welded the connection necks for inlet of the pressure oil with internal thread and the plug together with solid cylinder eye.
Both the cylinder eye and piston rod eye are equipped with the knuckle bearing as standard. The lid for piston rod guidance with the sealing elements is screwed into the tube of cylinder cover. On the grinded – polished and chromed piston rod with the dimension tolerance f7 there is the connection eye welded from one side and the second end is equipped with the piston.

OPERATING CONDITIONS

The linear hydraulic motors of this kind do not require any special demands for service and maintenance.

- the mounting of LHM must be done under conditions preventing the damage of function parts and which secure the protection of inner space against penetration of impurities
- properly provide the connection of LHM to the pressure source (danger of oil pressure decrease) and the mounting of LHM into the kinematic system of the given machine/device
- the work position of LHM is optional if not otherwise specified
- radial load of the piston rod by external force (or its radial force, caused by the LHM camber of own weight) or its rotations during working time are not allowed
- take care during the work to prevent the mechanical damages of the piston rod
- the hydraulic motor must not be loaded in the end positions by external force or by power of steady mass corresponding to 1,25 multiple of rated pressure
- when mounted into the machine's mechanical parts (or into some device) the possibility of swiveling of hydraulic cylinder body must be secured in transverse direction in the area of allowed swiveling of knuckle bearing
- LHM must not be exposed to any aggressive agents, aggressiveness of which would exceed the guaranteed resistance value for the motor piston rod used. The resistance value is specified in technical conditions.

TECHNICAL CONDITIONS

Work liquid	– hydraulic mineral oil (OH-HM 32, OH-HM 46, OH-HM 64)
Required filtration	– min. 40 μm, we recommend 25 μm
Temperature scope	– liquid -20°C ÷ +80°C
	– ambient -20°C ÷ +70°C
Climatic stability	– temperate climate WT
Rated pressure	– 20 MPa
Maximum pressure	– 25 MPa
Test pressure	– 32 MPa
Work speed	– maximum 0,5 $m \cdot s^{-1}$
The piston rod resistance value in the salt chamber pursuant to ISO 4540	– 120 hours

MARKING

Each hydraulic motor manufactured in our factory is marked with following data:

HYDRAULICS SEHRADICE
ZH2RT D/d x Z R / K /
MAX.OPERATING PRESSURE
SERIAL NUMBER

Part of the item delivery is the accompanying documentation containing

ITEM SAFEGUARD and
QUALITY CERTIFICATE /document details see page no. 97-98/.

ZH2RT Series

for P_{max} 25 MPa

Cap-eye solution for ∅32.

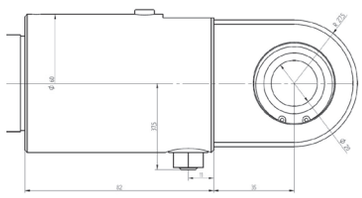

Position of the screws joint to the swing plane

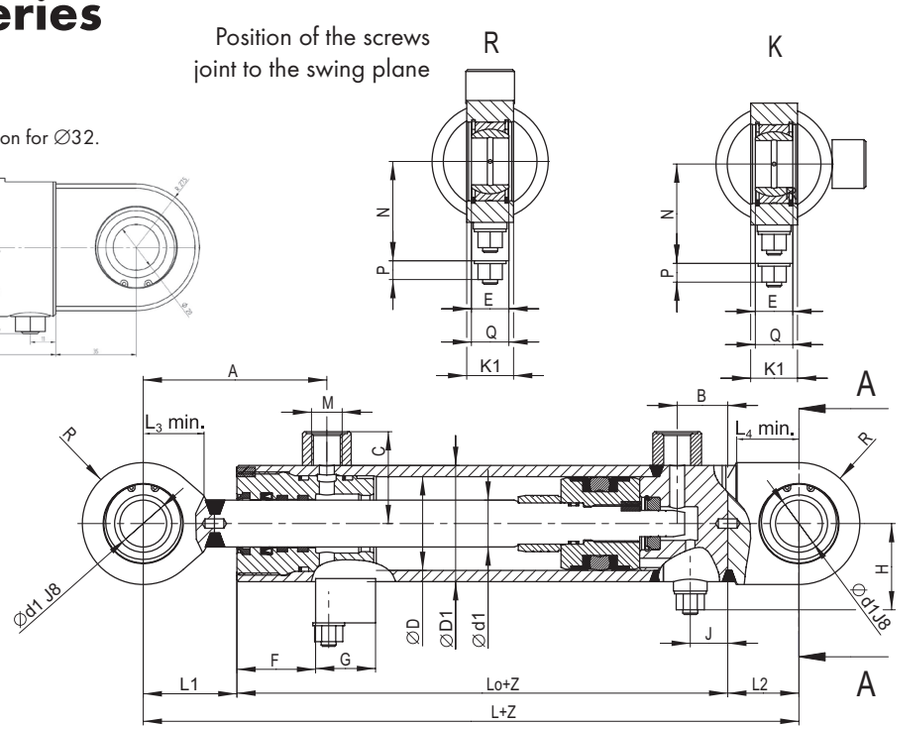

∅D	∅d	$∅D_1$	$∅d_1$	L	L_0	L_1	L_2	L_3 ± 1	L_4 ± 1	M	A	B	C	E	K_1	R	F	G	H	J	N	P	Q	Maximum recom. lift acc. to selected ∅d	Weight under given lift Z
32	18	42	20	205	125	45	35	30	30	12x1,5	42	10	39	16	20	27,5	33	32	38	11	43	10	20	160	2,15 + Z x 0,00656
32	20	42	20	205	125	45	35	30	30	12x1,5	42	10	39	16	20	27,5	33	32	38	11	43	10	20	220	2,15 + Z x 0,00703
40	22	50	20	215	135	45	35	30	30	16x1,5	42	15	43	16	20	27,5	33	32	41,5	13	47	10	20	200	2,85 + Z x 0,00853
40	25	50	20	215	135	45	35	30	30	16x1,5	42	15	43	16	20	27,5	33	32	41,5	13	47	10	20	290	3,05 + Z x 0,00940
45	25	55	25	225	137	50	38	33	33	16x1,5	45	16	45,5	20	25	32,5	38	32	42,5	17	49,5	10	20	240	3,30 + Z x 0,01000
45	28	55	25	225	137	50	38	33	33	16x1,5	45	16	45,5	20	25	32,5	38	32	42,5	17	49,5	10	20	340	3,46 + Z x 0,01100
50	25	62	25	250	162	50	38	33	33	16x1,5	48	16	49	20	25	32,5	42	32	45	20	53	10	20	200	4,75 + Z x 0,01214
50	28	62	25	250	162	50	38	33	33	16x1,5	48	16	49	20	25	32,5	42	32	45	20	53	10	20	280	4,85 + Z x 0,01312
55	28	70	25	260	161	57	42	37	36	16x1,5	50	17	53	20	25	35	38,5	38	48	18	60	11	23	240	4,62 + Z x 0,01640
55	32	70	25	260	161	57	42	37	36	16x1,5	50	17	53	20	25	35	38,5	38	48	18	60	11	23	350	4,80 + Z x 0,01787
60	32	75	25	265	166	57	42	37	36	16x1,5	53	16	55,5	20	25	35	43,5	38	50,5	17	62,5	11	23	310	6,01 + Z x 0,01880
60	36	75	25	265	166	57	42	37	36	16x1,5	53	16	55,5	20	25	35	43,5	38	50,5	17	62,5	11	23	420	7,04 + Z x 0,02047
63	36	78	30	285	175	65	45	44	39	16x1,5	58	16	57	22	28	42,5	45,5	38	52	17	64	11	23	390	7,58 + Z x 0,02103
63	40	78	30	285	175	65	45	44	39	16x1,5	58	16	57	22	28	42,5	45,5	38	52	17	64	11	23	510	7,81 + Z x 0,02290
65	36	80	30	290	180	65	45	44	39	22x1,5	58	22	58	22	28	42,5	45,5	38	55	21	65	11	23	370	8,78 + Z x 0,02140
65	40	80	30	290	180	65	45	44	39	22x1,5	58	22	58	22	28	42,5	45,5	38	55	21	65	11	23	490	8,89 + Z x 0,02327
70	40	85	30	295	185	65	45	44	39	22x1,5	58	23	60,5	22	28	42,5	47,5	42	59	21	74,5	12,5	25	440	9,71 + Z x 0,02420
70	45	85	30	295	185	65	45	44	39	22x1,5	58	23	60,5	22	28	42,5	47,5	42	59	21	74,5	12,5	25	600	9,92 + Z x 0,02680
75	40	90	35	335	205	75	55	53	48	22x1,5	63	23	63	25	30	47,5	50	42	61,5	21	77	12,5	25	380	11,16 + Z x 0,02512
75	45	90	35	335	205	75	55	53	48	22x1,5	63	23	63	25	30	47,5	50	42	61,5	21	77	12,5	25	530	11,39 + Z x 0,02774
80	45	95	35	340	205	80	55	53	48	22x1,5	65	25	65,5	25	30	47,5	53,5	42	64	21	79,5	12,5	25	480	14,46 + Z x 0,02866
80	50	95	35	340	205	80	55	53	48	22x1,5	65	25	65,5	25	30	47,5	53,5	42	64	21	79,5	12,5	25	630	15,36 + Z x 0,03160
90	50	105	40	375	230	85	60	57	53	22x1,5	70	28	70,5	28	35	52,5	61,5	46	72	25	84,5	12,5	25	530	18,90 + Z x 0,03344
90	55	105	40	375	230	85	60	57	53	22x1,5	70	28	70,5	28	35	52,5	61,5	46	72	25	84,5	12,5	25	680	19,90 + Z x 0,03668
100	55	120	45	410	250	95	65	67	57	27x2	80	30	82	32	38	60	66	50	76	30	95	11	32	570	28,10 + Z x 0,04578
100	63	120	45	410	250	95	65	67	57	27x2	80	30	82	32	38	60	66	50	76	30	95	11	32	810	27,60 + Z x 0,05160
110	63	130	50	430	255	105	70	70	62	27x2	85	30	87	35	40	62,5	73	50	81	28	100	11	32	710	29,40 + Z x 0,05406
110	70	130	50	430	255	105	70	70	62	27x2	85	30	87	35	40	62,5	73	50	81	28	100	11	32	930	31,22 + Z x 0,05980

Piston rod lift according to the customer's wish.
Lifts higher than maximum recommended need to be controlled for the ultimate strength.

The articulated bearing is designed also for lubrication with the pin.

The weights are informative within scope of ± 5% in kg.

ZH2RT Series hydraulic motors gripping

Gripping ZH2RT–A — ZH2RT-AS

Cylinder	D_1	D_2	B	∅d	n	L_0	L_{OS}	B_S
32	67	50	10	8,4	4		125	10
40	98	80	12	8,4	6	135	164	40
45	103	85	12	10,5	6	137	169	44
50	113	95	13	10,5	6	162	192	49
55	118	100	13	10,5	6	161	195	52
60	128	108	13	10,5	6	166	204	53
63	138	115	15	13	6	175	215	55
65	138	115	15	13	6	180	215	55
70	148	120	15	13	6	185	221	58
75	155	130	16	15	6	205	242	62
80	168	140	18	15	6	205	242	62
90	178	150	20	15	6	230	277	72
100	200	170	20	17	6	250	296	77
110	210	180	22	17	6	255	310	83

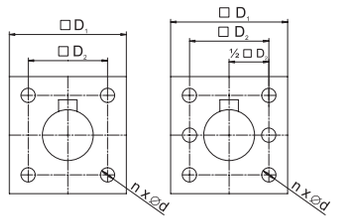

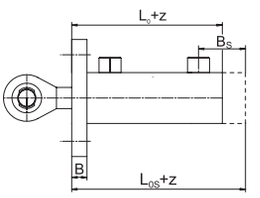

Gripping ZH2RT–B — ZH2RT-BS

Cylinder	$∅D_1$	$∅D_2$	B	d	n	L_0	L_{OS}	B_S
32	88	70	10	8,4	4		125	10
40	98	80	12	8,4	6	135	164	40
45	103	85	12	8,4	6	137	169	44
50	113	95	13	10,5	6	162	192	49
55	118	100	13	10,5	6	161	195	52
60	128	108	13	10,5	6	166	204	53
63	138	115	15	13	6	175	215	55
65	138	115	15	13	6	180	215	55
70	148	120	15	13	6	185	221	58
75	155	130	16	13	6	205	242	62
80	168	140	18	15	6	205	242	62
90	178	150	20	15	6	230	277	72
100	198	170	20	17	6	250	296	77
110	208	180	22	17	6	255	310	83

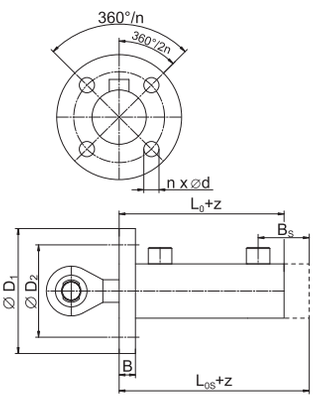

Gripping ZH2RT–C — ZH2RT-CS

Cylinder	A	B h11	C	d f8	E	F	Gx45°	H	K	L_0	L_{OS}	B_S
32	90	55	28	20	53	17,5	1	5	19		125	10
40	105	65	28	20	65	20	1	5	19	135	164	40
45	110	70	33	25	70	20	1	5	22	137	169	44
50	120	80	33	25	80	20	1	5	22	162	192	49
55	135	90	35	25	90	22,5	1	5	23	161	195	52
60	140	95	35	25	95	22,5	1	7	25	166	204	53
63	150	100	40	30	100	25	1,5	7	27	175	215	55
65	155	105	40	30	100	25	1,5	7	27	180	215	55
70	160	110	40	30	105	25	1,5	7	27	185	221	58
75	180	120	45	35	115	30	1,5	7	30	205	242	62
80	185	125	45	35	115	30	1,5	8	31	205	242	62
90	205	135	50	40	135	35	1,5	8	33	230	277	72
100	220	150	55	45	150	35	1,5	10	38	250	296	77
110	240	160	60	50	160	40	1,5	10	40	255	310	83

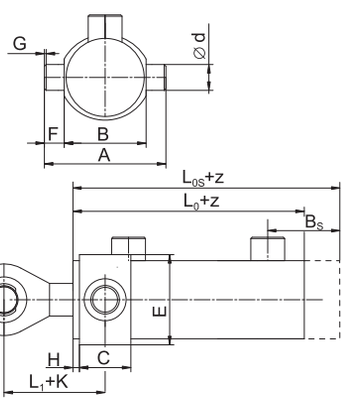

Gripping ZH2RT–D — ZH2RT-DS

Cylinder	B	C	∅d	E	F	G	H	L_0	L_{OS}	C_S	B_S
32	20	15	10,5	65	88	10	36		125	15	10
40	24	20	10,5	75	100	12	31	135	164	49	40
45	24	20	13	80	105	12	35	137	169	52	44
50	24	20	13	88	110	14	38	162	192	50	49
55	26	20	13	98	123	16	43	161	195	54	52
60	30	25	15	107	135	16	47	166	204	63	53
63	30	25	15	110	138	18	50	175	215	65	55
65	30	25	15	110	138	18	50	180	215	60	55
70	34	27	17	118	150	20	55	185	221	63	58
75	34	27	17	125	158	20	55	205	242	64	62
80	40	30	21	140	180	24	60	205	242	67	62
90	40	30	21	150	190	24	65	230	277	77	72
100	48	34	25	170	215	26	75	250	296	80	77
110	48	34	25	180	230	26	80	255	310	89	83

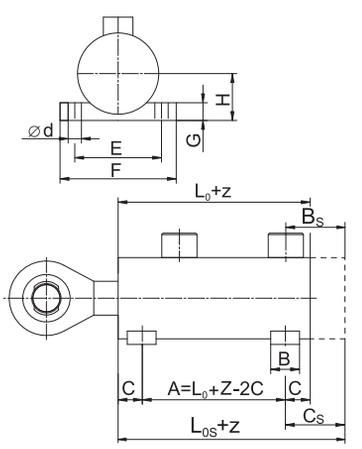

Dimensions LOS, BS and CS apply to the LHM design with a screwed plug.

ZH2RT

Variants of piston rod end

Connection eye welded **version 1**

Ød	18	20	22	25	28	32	36	40	45	50	55	63	70	80	90	100	110
a_{min}	10	10	10	12	12	15	15	15	15	20	20	20	25	30	30	30	30

Ød1. H - choose according to connection eye offer sheet (page 75÷90)

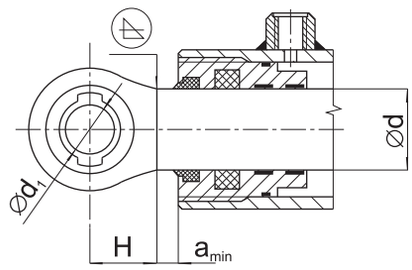

ZH1

internal thread **version 2**

Ød	20	22	25	28	32	36	40	45	50	55	63	70	80	90	100	110
m	**14x1.5**	**16x1.5**	**18x1.5** 20x1.5	**20x1.5**	**24x1.5**	**24x1.5** 27x2	**27x2**	**27x2** 30x2	**30x2** 36x2	**36x2** 42x2	**42x2**	**42x2** 52x2	**60x2**	**68x2**	**75x2**	**75x2**
a	12	12	15	17	17	20	20	20	25	25	30	30	35	40	45	45
b_{max}	40	40	56	56	60	70	70	70	80	90	90	100	100	110	110	110
s	18	19	22	24	28	30	36 32	38 41	41 46	46 50	55 60	60 65	70	80	90	100
S_a	8	8	10	12	12	15	15	15	18	18	20	20	25	30	35	35

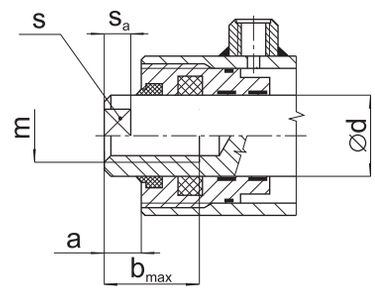

ZH2

ZH2T

ZH2RT

external thread **version 3**

Ød	18	20	22	25	28	32	36	40	45	50	55	63	70	80	90	100	110
m	**16x1.5**	16x1.5 **18x1.5**	16x1.5 **18x1.5**	18x1.5 **20x1.5**	20x1.5 **22x1.5**	**24x1.5**	24x1.5 **27x2**	27x2 **30x2**	27x2 **30x2**	30x2 **36x2**	36x2 **42x2**	**42x2**	42x2 **52x2**	**60x2**	**68x2**	**75x2**	**75x2**
a	12	12	12	15	17	17	20	20	20	25	25	30	30	35	40	40	45
b	20	20 30	20 30	30	30 34	34 40	40	40 45	40 45	45 50	50	60	60	70	70	70	70
s	16	18	19	22	24	30	32	36	41	46	50	60	65	70	80	90	100
S_a	8	8	8	10	12	12	15	15	15	18	18	20	20	25	30	35	35

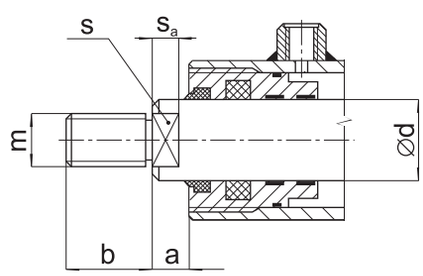

neck hole **version 4**

Ød	18	20	22	25	28	32	36	40	45	50	55	63	70
d_1	10	12	12	14	15	17	20	22	26	28	30	40	50
a	6	6	8	8	8	10	10	12	12	15	15	18	18
b	25	30	35	40	45	50	60	70	80	95	100	120	135
c	15	18	22	25	29	31	36	43	50	59	64	80	85
e	13	15	16	18	20	24	26	28	32	34	38	40	46

The highlighted dimensions are default.

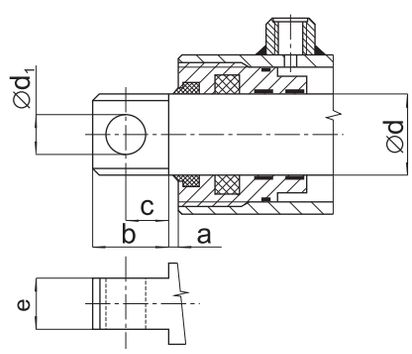

Ordering code

For standard linear hydraulic motors
ZH1, ZH1 – A až ZH2RT – D Series
Acc. to the table on page 15, 19, 23, 27.

And for linear hydraulic motors using the construction module L_0 and another then standard piston rods ends and connection eyes ends.

[ ] – [ ] / [ ] x [ ] – [ ] – [ ] – [ ] – [ ]

Cylinder cover eye marking – (in case of not employing any eye from our catalogue fill in 0 to the code) – page 75÷90.

Piston rod eye marking – (in case of not employing any eye from our catalogue fill in 0 to the code) – page 75÷90.

Piston rod end – (for single solution without rod eye the highlighted dimensions are valid. In case of not employing any eye from our catalogue fill in 0 to the code) – page 29.

The position of pressure inputs to welded-on eye on cylinder surface (valid only for ZH1, ZH2, ZH2T, ZH2RT) – according to herein stated drawings.

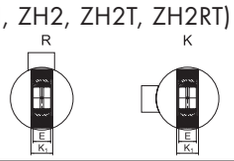

Lift – due to Your actual need - it is necessary to check the maximal possible lift because of the ultimate strength - the diagram of ultimate strength can be helpful according to Euler page 93.

Piston rod diameter

ØD	Ød	ØD1	Ød1	L
25	14	35	12	142
25	12	351	12	142

Rated diameter of cylinder

ØD	Ød	ØD1	Ød1	L
25	14	35	12	142
25	12	351	12	142

ZH1, ZH1-A, ZH1-AS
ZH1-B, ZH1-BS
ZH1-C, ZH1-CS
ZH1-D, ZH1-DS

ZH2, ZH2-A, ZH2-AS
ZH2-B, ZH2-BS
ZH2-C, ZH2-CS
ZH2-D, ZH2-DS

ZH2T, ZH2T-A, ZH2T-AS
ZH2T-B, ZH2T-BS
ZH2T-C, ZH2T-CS
ZH2T-D, ZH2T-DS

ZH2RT, ZH2RT-A, ZH2RT-AS
ZH2RT-B, ZH2RT-BS
ZH2RT-C, ZH2RT-CS
ZH2RT-D, ZH2RT-DS

Example:

ZH1 – 63/36 x 250 – R

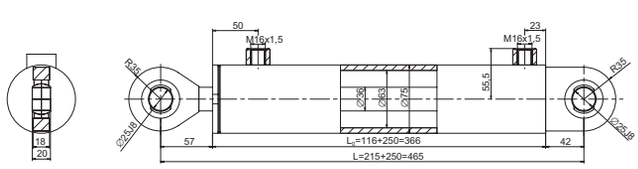

ZH2T –A–80/45x400–2–0–0

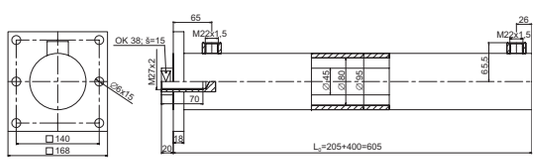

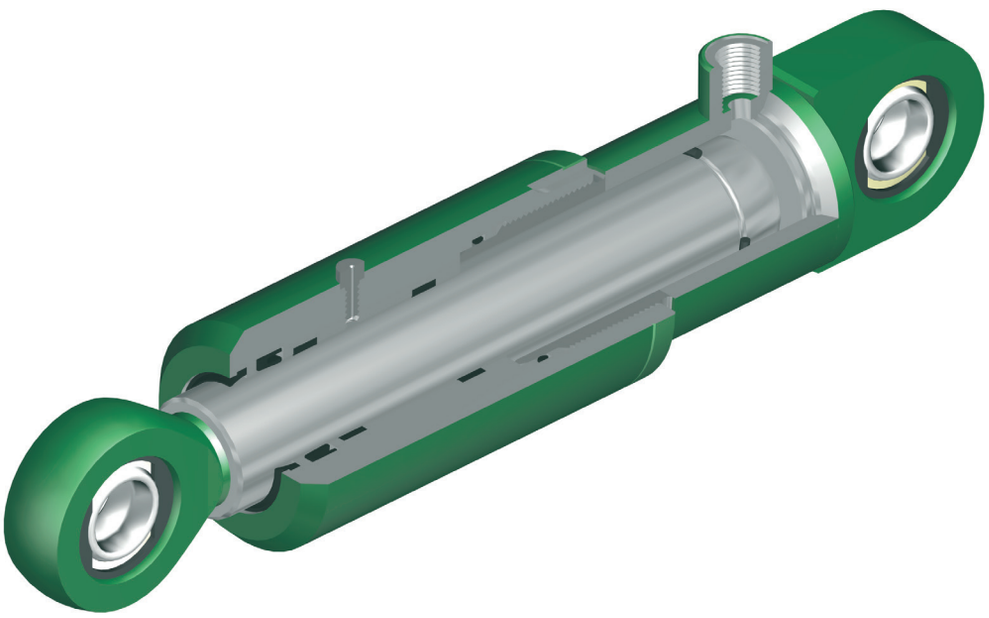

ZH-PL

Linear hydraulic motors of the ZH-PL series

TECHNICAL DESCRIPTION – PRODUCT FUNCTION

The ZH-PL linear hydraulic motor is the element that converts the pressure energy to the mechanical energy – to the axial power of the piston rod in one direction – extension. The backward movement must be secured by external force. They have – by their construction - no special demands for service and maintenance. It is necessary to obey the service and technical conditions for perfect and secure functionality.
The ZH-PL is composed of the tube of given dimension without the necessity of precision worked inner geometry. On the tube there are welded the connection necks for inlet of the pressure oil with internal thread and the plug together with solid cylinder eye.
Both the cylinder eye and piston rod eye are equipped with the knuckle bearing as standard. The lid for piston rod guidance with the sealing elements and the air outlet of oil tank are screwed into the tube of cylinder cover. On the grinded – polished and chromed piston rod with the dimension tolerance f7 there is the connection eye welded from one side and the second end is equipped with the lift stop.

OPERATING CONDITIONS

The linear hydraulic motors of this kind do not require any special demands for service and maintenance.
- the mounting of LHM must be done under conditions preventing the damage of function parts and which secure the protection of inner space against penetration of impurities
- properly provide the connection of LHM to the pressure source (danger of oil pressure decrease) and the mounting of LHM into the kinematic system of the given machine/device
- the work position of LHM is optional if not otherwise specified
- radial load of the piston rod by external force (or its radial force, caused by the LHM camber of own weight) or its rotations during working time are not allowed
- take care during the work to prevent the mechanical damages of the piston rod
- the hydraulic motor must not be loaded in the end positions by external force or by power of steady mass corresponding to 1.25 multiple of rated pressure
- when mounted into the machine's mechanical parts (or into some device) the possibility of swiveling of hydraulic cylinder body must be secured in transverse direction in the area of allowed swiveling of knuckle bearing
- LHM must not be exposed to any aggressive agents, aggressiveness of which would exceed the guaranteed resistance value for the motor piston rod used. The resistance value is specified in technical conditions.

TECHNICAL CONDITIONS

Work liquid	– hydraulic mineral oil (OH-HM 32, OH-HM 46, OH-HM 64)
Required filtration	– min. 40 μm, we recommend 25 μm
Temperature scope	– liquid -20°C ÷ +80°C
	– ambient -20°C ÷ +70°C
Climatic stability	– temperate climate WT
Rated pressure	– 20 MPa
Maximum pressure	– 25 MPa
Test pressure	– 32 MPa
Work speed	– maximum 0,5 $m \cdot s^{-1}$
The piston rod resistance value in the salt chamber pursuant to ISO 4540	– 120 hours

MARKING

Each hydraulic motor manufactured in our factory is marked with following data:

HYDRAULICS SEHRADICE
ZH-PL d x Z R / K /
MAX.OPERATING PRESSURE
SERIAL NUMBER

Part of the item delivery is the accompanying documentation containing

ITEM SAFEGUARD and
QUALITY CERTIFICATE /document details see page no. 97-98/.

ZH-PL Series

for P_{max} 25 MPa

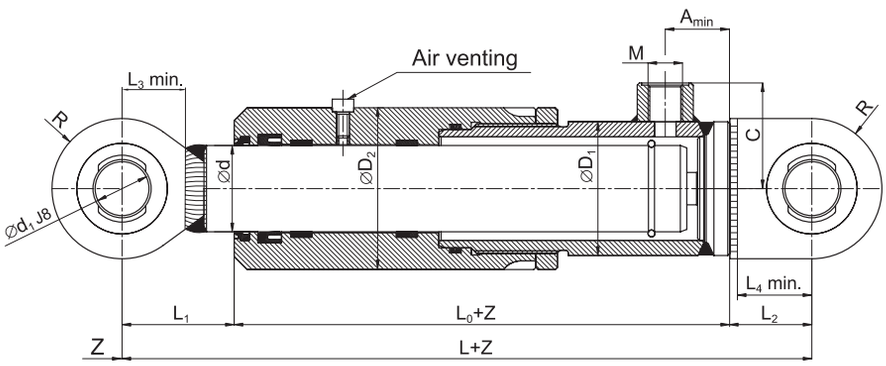

Position of the screws joint to the swing plane

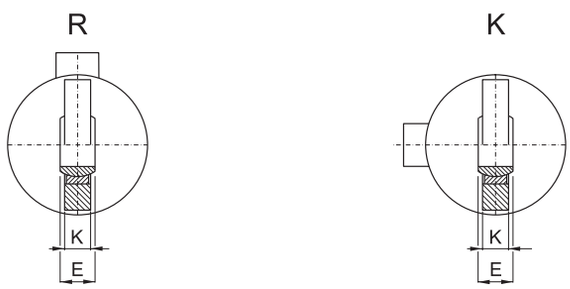

ZH-PL

Ød	L	L_0	L_1	L_2	L_3 ± 1	L_4 ± 1	ØD_1	ØD_2	Ød_1	E	K	R	M	A_{min}	C	Maximum recom. lift acc. to selected Ød	Weight under given lift Z
32	185	105	45	35	32	31	50	65	20	16	14	27,5	12x1,5	25	43	730	3,30 + Z x0,01200
36	195	115	45	35	32	31	55	70	20	16	14	27,5	16x1,5	25	45,5	830	4,00 + Z x0,01400
40	220	130	52	38	33	33	60	75	25	20	18	32,5	16x1,5	30	48	917	5,90 + Z x0,02000
45	225	135	52	38	33	33	70	85	25	20	18	32,5	16x1,5	30	53	1040	7,10 + Z x0,02400
50	240	140	58	42	37	37	78	95	25	20	18	35	16x1,5	30	57	1160	9,40 + Z x0,02900
55	255	145	65	45	45	39	78	99	30	22	20	42,5	22x1,5	30	57	1280	11,20 + Z x0,03300
63	275	165	65	45	45	39	85	115	30	22	20	42,5	22x1,5	38	60,5	1480	16,20 + Z x0,04500
70	315	180	80	55	54	49	95	120	35	25	25	47,5	22x1,5	38	65,5	1640	19,40 + Z x0,04600
80	325	190	80	55	54	49	105	130	35	25	25	47,5	27x2	38	74,5	1890	23,60 + Z x0,06100

Piston rod lift according to the customer's wish.
Lifts higher than maximum recommended need to be controlled for the ultimate strength.

The articulated bearing is designed also for lubrication with the pin.

The weights are informative within scope of ± 5% in kg.

ZH-PL hydraulic motors gripping

Gripping ZH-PL – A

Cylinder	D_1	D_2	B	Ød	n	L_0
32	88	68	12	10.5	4	105
36	93	70	12	10.5	4	115
40	98	75	14	10.5	4	130
45	108	85	14	10.5	4	135
50	147	127	16	10.5	6	140
55	155	133	18	10.5	6	145
63	177	153	20	13	6	165
70	185	160	22	13	6	180
80	197	170	22	15	6	190

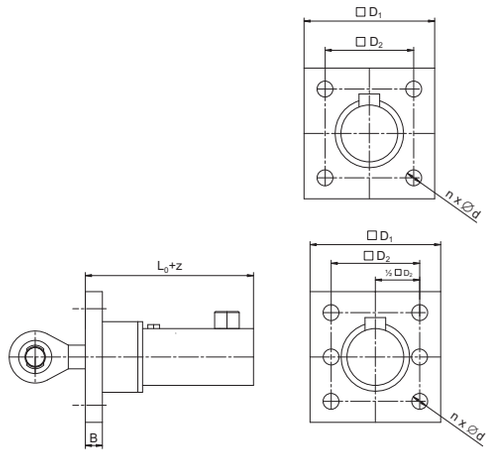

Gripping ZH-PL – B

Cylinder	D_1	D_2	B	Ød	n	L_0
32	115	95	12	10.5	4	105
36	122	100	12	10.5	4	115
40	127	108	14	10.5	4	130
45	137	118	14	10.5	4	135
50	147	128	16	10.5	6	140
55	155	133	18	10.5	6	145
63	177	153	20	13	6	165
70	185	160	22	13	6	180
80	197	170	22	15	6	190

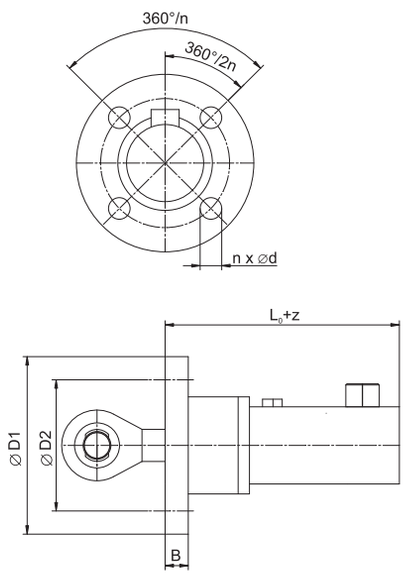

ZH-PL

Piston rod end for hydraulic motors ZH-PL

Variant: no. 2, 3 - we recommend to design according to lifting eyes (page 78÷93)

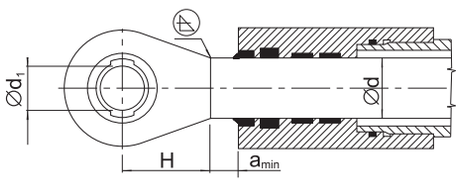

Lifting eye welded **variant 1**

Ød	32	36	40	45	50	55	63	70	80
a_{min}	15	15	15	15	20	20	20	25	25

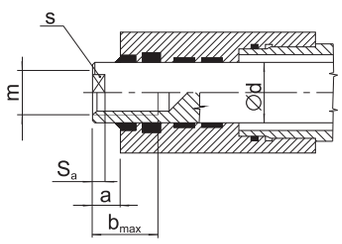

internal thread **variant 2**

Ød	32	36	40	45	50	55	63	70	80
m	**18x1.5**	**18x1.5**	**18x1.5**	**18x1.5**	**24x1.5**	**24x1.5**	**24x1.5**	**30x2**	**30x2**
	20x1.5	24x1.5	24x1.5	24x1.5	27x2	30x2	30x2	42x2	42x2
	24x1.5	27x2	27x2	30x2	36x2	42x2	42x2	52x2	52x2
a	17	20	20	20	25	25	30	30	30
b_{max}	60	70	70	70	80	90	90	100	100
s	28	30	36	38	41	46	55	60	65
			32	41	46	50	60	65	70
S_a	12	15	15	15	18	18	20	20	20

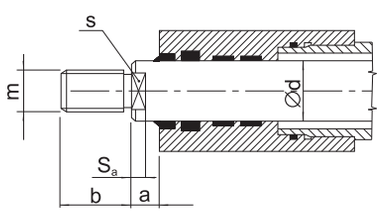

external thread **variant 3**

Ød	32	36	40	45	50	55	63	70	80
m	18x1.5	18x1.5	18x1.5	18x1.5	24x1.5	24x1.5	24x1.5	30x2	30x2
		24x1.5	24x1.5	24x1.5	27x2	30x2	30x2	42x2	42x2
	24x1.5	**27x2**	**30x2**	**30x2**	**36x2**	**42x2**	**42x2**	**52x2**	**52x2**
a	17	20	20	20	25	25	30	30	30
b_{max}	40	40	45	45	50	50	60	60	60
s	30	32	36	41	46	50	60	65	75
S_a	12	15	15	15	18	18	20	20	20

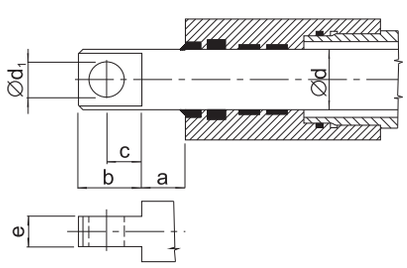

neck hole **variant 4**

Ød	32	36	40	45	50	55	63	70	80
$Ød_1$	17	20	22	26	28	30	40	50	52
a	10	10	12	12	15	15	18	18	18
b	50	60	70	80	95	100	120	135	145
c	31	36	43	50	59	64	80	85	90
e	24	26	28	32	34	38	40	46	56

The highlighted dimensions are default.

Ordering code

For standard linear hydraulic motors
ZH-PL Series
Acc. to the table on page 33

And for plungers ZH-PL using the construction module L_0 and another then standard piston rods ends and connection eyes ends.

[ ] – [ ] x [ ] – [ ] – [ ] – [ ] / [ ]

Cylinder cover eye marking – (in case of not employing any eye from our catalogue fill in 0 to the code) – page 75÷90.

Piston rod eye marking – (in case of not employing any eye from our catalogue fill in 0 to the code) – page 75÷90.

Piston rod end – (for single solution without rod eye the highlighted dimensions are valid. In case of not employing any eye from our catalogue fill in 0 to the code) – page 35.

The position of pressure inputs to welded-on eye on cylinder surface (valid only for ZH-PL) – according to herein stated drawings.

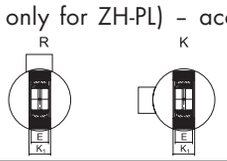

Lift
– due to Your actual need – it is necessary to check the maximal possible lift because of the ultimate strength – the diagram of ultimate strength can be helpful according to Euler page 93.

Piston rod diameter

Ød	L	L_0	L_1
32	185	105	45
36	195	115	45

ZH-PL,
ZH-PL – A,
ZH-PL – B,

ZH-PL

Example:

ZH-PL – 45x300–R

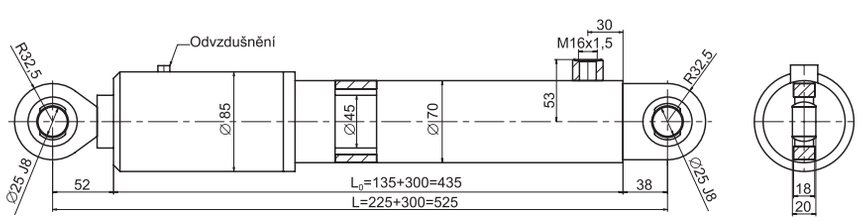

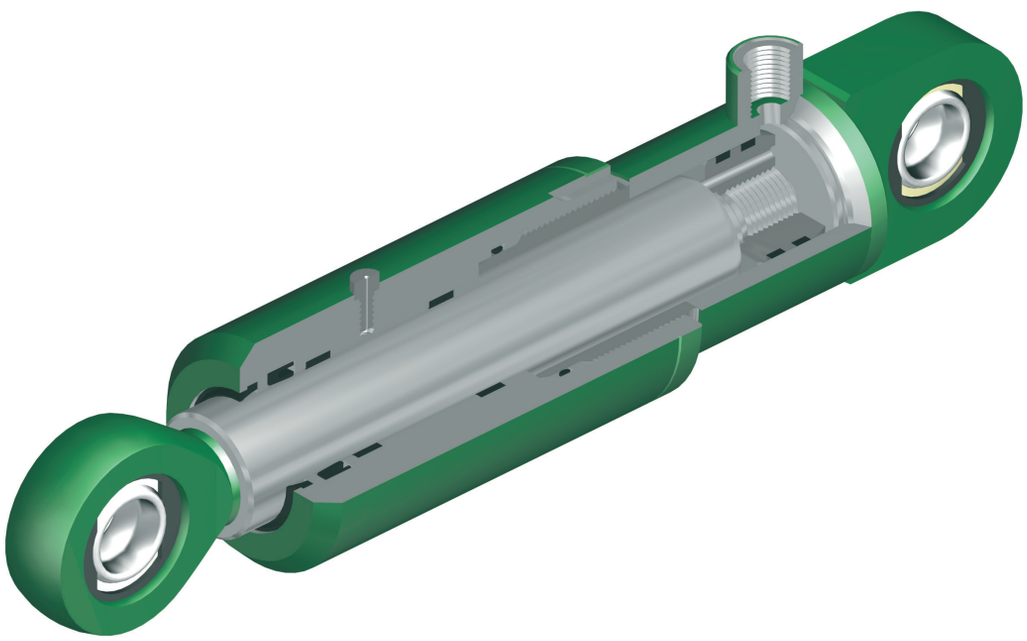

ZH-PL1

Linear hydraulic motors of the ZH-PL1 series

TECHNICAL DESCRIPTION – PRODUCT FUNCTION

The ZH-PL1 linear hydraulic motor is the element that converts the pressure energy to the mechanical energy – to the axial power of the piston rod in one direction – extension. The backward movement must be secured by external force. They have – by their construction – no special demands for service and maintenance. It is necessary to obey the service and technical conditions for perfect and secure functionality.

The ZH-PL1 is composed of the tube with precision worked inner diameter within the H8 allowance. On the tube there are welded the connection necks for inlet of the pressure oil with internal thread and the plug together with solid cylinder eye.

Both the cylinder eye and piston rod eye are equipped with the knuckle bearing as standard. The lid for piston rod guidance with the sealing elements and the air outlet of oil tank are screwed into the tube of cylinder cover. On the grinded – polished and chromed piston rod with the dimension tolerance f7 there is the connection eye welded from one side and the second end is equipped with the lift stop.

OPERATING CONDITIONS

The linear hydraulic motors of this kind do not require any special demands for service and maintenance.

the mounting of LHM must be done under conditions preventing the damage of function parts and which secure the protection of inner space against penetration of impurities

- properly provide the connection of LHM to the pressure source (danger of oil pressure decrease) and the mounting of LHM into the kinematic system of the given machine/device
- the work position of LHM is optional if not otherwise specified
- radial load of the piston rod by external force (or its radial force, caused by the LHM camber of own weight) or its rotations during working time are not allowed
- take care during the work to prevent the mechanical damages of the piston rod
- the hydraulic motor must not be loaded in the end positions by external force or by power of steady mass corresponding to 1,25 multiple of rated pressure
- when mounted into the machine's mechanical parts (or into some device) the possibility of swiveling of hydraulic cylinder body must be secured in transverse direction in the area of allowed swiveling of knuckle bearing
- LHM must not be exposed to any aggressive agents, aggressiveness of which would exceed the guaranteed resistance value for the motor piston rod used. The resistance value is specified in technical conditions.

TECHNICAL CONDITIONS

Work liquid	– hydraulic mineral oil (OH-HM 32, OH-HM 46, OH-HM 64)
Required filtration	– min. 40 μm, we recommend 25 μm
Temperature scope	– liquid -20°C ÷ +80°C
	– ambient -20°C ÷ +70°C
Climatic stability	– temperate climate WT
Rated pressure	– 20 MPa
Maximum pressure	– 25 MPa
Test pressure	– 32 MPa
Work speed	– maximum 0,5 $m \cdot s^{-1}$
The piston rod resistance value in the salt chamber pursuant to ISO 4540	– 120 hours

MARKING

Each hydraulic motor manufactured in our factory is marked with following data:

HYDRAULICS SEHRADICE
ZH-PL1 d x Z R / K /
MAX.OPERATING PRESSURE
SERIAL NUMBER

Part of the item delivery is the accompanying documentation containing

ITEM SAFEGUARD and
QUALITY CERTIFICATE /document details see page no. 97-98/.

ZH-PL1 Series

for P_{max} 25 MPa

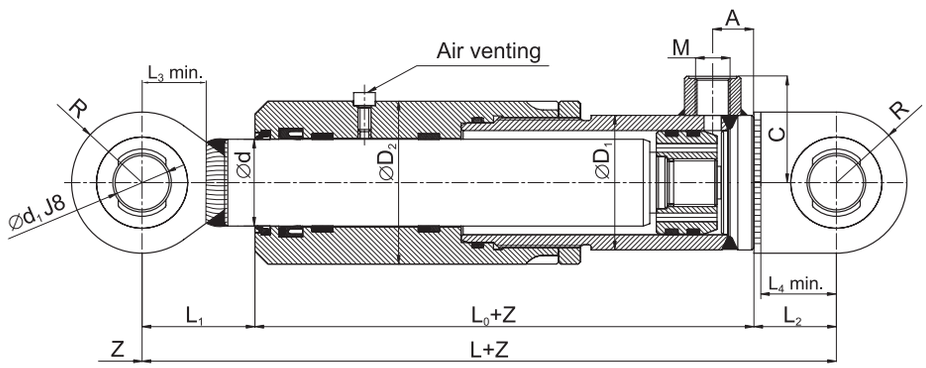

Position of the screws joint to the swing plane

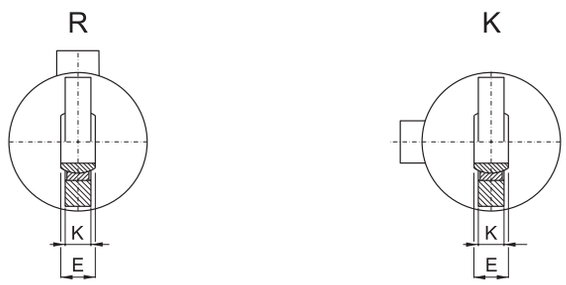

Ød	L	L_0	L_1	L_2	L_3 ± 1	L_4 ± 1	$ØD_1$	$ØD_2$	$Ød_1$	E	K	R	M	A	C	Maximum recom. lift acc. to selected Ød	Weight under given lift Z
28	170	90	45	35	32	31	42	57	20	16	14	27.5	12x1.5	19	39	1000	2.50 + Z x 0.01000
32	170	90	45	35	32	31	50	65	20	16	14	27.5	12x1.5	19	43	1100	3.10 + Z x 0.01200
36	170	90	45	35	32	31	50	65	20	16	14	27.5	16x1.5	19	43	1250	3.20 + Z x 0.01400
40	185	95	52	38	33	33	55	70	25	20	18	32.5	16x1.5	19	45.5	1400	4.20 + Z x 0.01600
45	190	100	52	38	33	33	62	77	25	20	18	32.5	16x1.5	20	49	1550	5.10 + Z x 0.02100
50	210	110	58	42	37	37	70	90	25	20	18	35	16x1.5	20	53	1700	7.40 + Z x 0.02700
55	225	115	65	45	45	39	78	98	30	22	20	42.5	22x1.5	25	57	1900	9.30 + Z x 0.03200
63	235	125	65	45	45	39	85	105	30	22	20	42.5	22x1.5	25	60.5	1900	10.90 + Z x 0.03900
70	265	130	80	55	54	49	90	110	35	25	25	47.5	22x1.5	30	63	1900	13.60 + Z x 0.04500

Piston rod lift according to the customer's wish.
Lifts higher than maximum recommended need to be controlled for the ultimate strength.

The articulated bearing is designed also for lubrication with the pin.

The weights are informative within scope of ± 5% in kg.

ZH-PL1 hydraulic motors gripping

Gripping ZH-PL1 – A

Cylinder	D_1	D_2	B	∅d	n	L_0
28	78	60	12	10.5	4	90
32	88	68	12	10.5	4	90
36	88	68	12	10.5	4	90
40	93	70	14	10.5	4	95
45	98	77	14	10.5	4	100
50	147	125	16	10.5	6	110
55	155	133	18	10.5	6	115
63	167	143	20	13	6	125
70	175	150	22	13	6	130

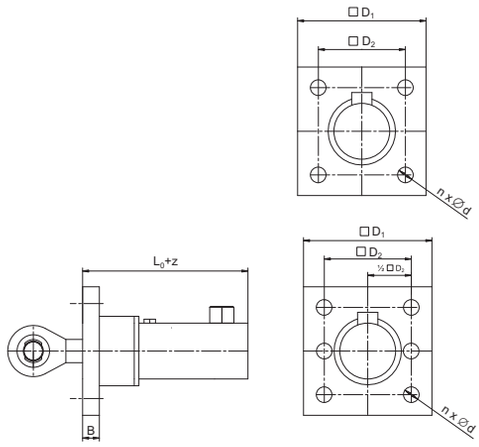

Gripping ZH-PL1 – B

Cylinder	D_1	D_2	B	∅d	n	L_0
28	108	88	12	10.5	4	90
32	115	95	12	10.5	4	90
36	115	95	12	10.5	4	90
40	122	103	14	10.5	4	95
45	128	109	14	10.5	4	100
50	147	125	16	10.5	6	110
55	155	133	18	10.5	6	115
63	167	143	20	13	6	125
70	175	150	22	13	6	130

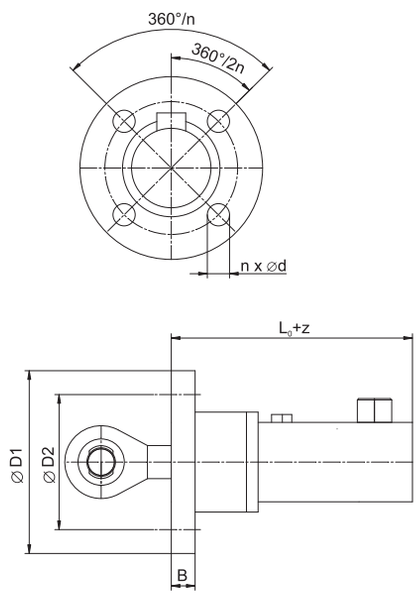

ZH-PL1

Piston rod end for hydraulic motors ZH-PL1

Variant: no. 2, 3 - we recommend to design according to lifting eyes (page 78÷93)

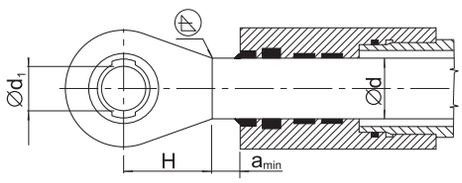

Lifting eye welded **variant 1**

Ød	28	32	36	40	45	50	55	63	70
a_{min}	12	15	15	15	15	20	20	20	25

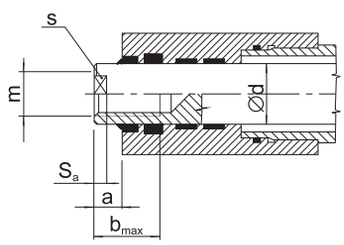

internal thread **variant 2**

Ød	28	32	36	40	45	50	55	63	70
m	**18x1.5**	**18x1.5**	**18x1.5**	**18x1.5**	**18x1.5**	**24x1.5**	**24x1.5**	**24x1.5**	**30x2**
	20x1.5	20x1.5	24x1.5	24x1.5	24x1.5	27x2	30x2	30x2	42x2
		24x1.5	27x2	27x2	30x2	36x2	42x2	42x2	52x2
a	17	17	20	20	20	25	25	30	30
b_{max}	56	60	70	70	70	80	90	90	100
s	24	28	30	36	38	41	46	55	60
				32	41	46	50	60	65
Sa	12	12	15	15	15	18	18	20	20

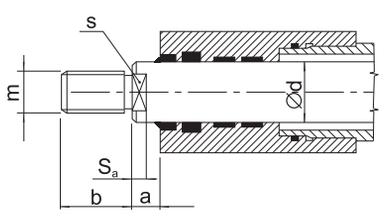

external thread **variant 3**

Ød	28	32	36	40	45	50	55	63	70
m	20x1.5	18x1.5	18x1.5	18x1.5	18x1.5	24x1.5	24x1.5	24x1.5	30x2
	22x1.5	**24x1.5**	24x1.5	24x1.5	24x1.5	27x2	30x2	30x2	42x2
			27x2	**30x2**	**30x2**	**36x2**	**42x2**	**42x2**	**52x2**
a	17	17	20	20	20	25	25	30	30
b_{max}	30	40	40	45	45	50	50	60	60
s	24	30	32	36	41	46	50	60	65
S_a	12	12	15	15	15	18	18	20	20

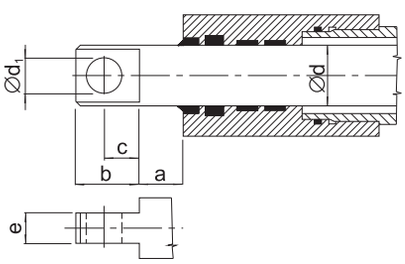

neck hole **variant 4**

Ød	28	32	36	40	45	50	55	63	70
$Ød_1$	16	17	20	22	26	28	30	40	50
a	10	10	10	12	12	15	15	18	18
b	48	50	60	70	80	95	100	120	135
c	29	31	36	43	50	59	64	80	85
e	20	24	26	28	32	34	38	40	46

The highlighted dimensions are default.

Ordering code

For standard plungers
ZH-PL1 Series
Acc. to the table on page 39

And for plungers ZH-PL1 using the construction module L_0 and another then standard piston rods ends and connection eyes ends.

[ ] – [ ] x [ ] – [ ] – [ ] – [ ] / [ ]

Cylinder cover eye marking – (in case of not employing any eye from our catalogue fill in 0 to the code) –page 75÷90.

Piston rod eye marking – (in case of not employing any eye from our catalogue fill in 0 to the code) – page 75÷90.

Piston rod end – (for single solution without rod eye the highlighted dimensions are valid. In case of not employing any eye from our catalogue fill in 0 to the code) – page 41.

The position of pressure inputs to welded-on eye on cylinder surface (valid only for ZH-PL1) – according to herein stated drawings.

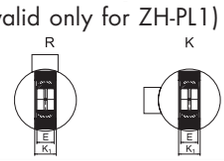

Lift – due to Your actual need – it is necessary to check the maximal possible lift because of the ultimate strength – the diagram of ultimate strength can be helpful according to Euler page 93.

Piston rod diameter

Ød	L	L_0	L_1
32	185	105	45
36	195	115	45

ZH-PL1,
ZH-PL1 – A,
ZH-PL1 – B,

ZH-PL1

Example:

ZH-PL1–B–50x1000–3–EJ30–0

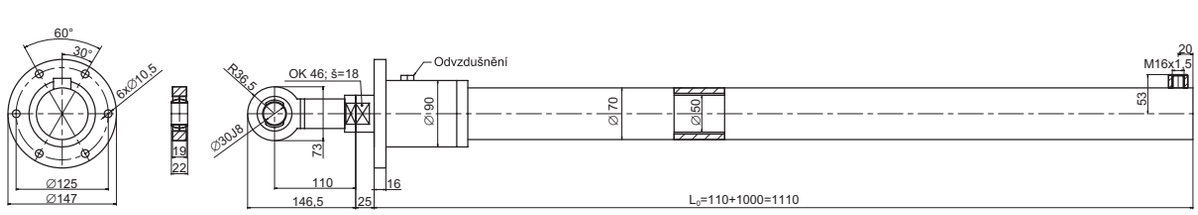

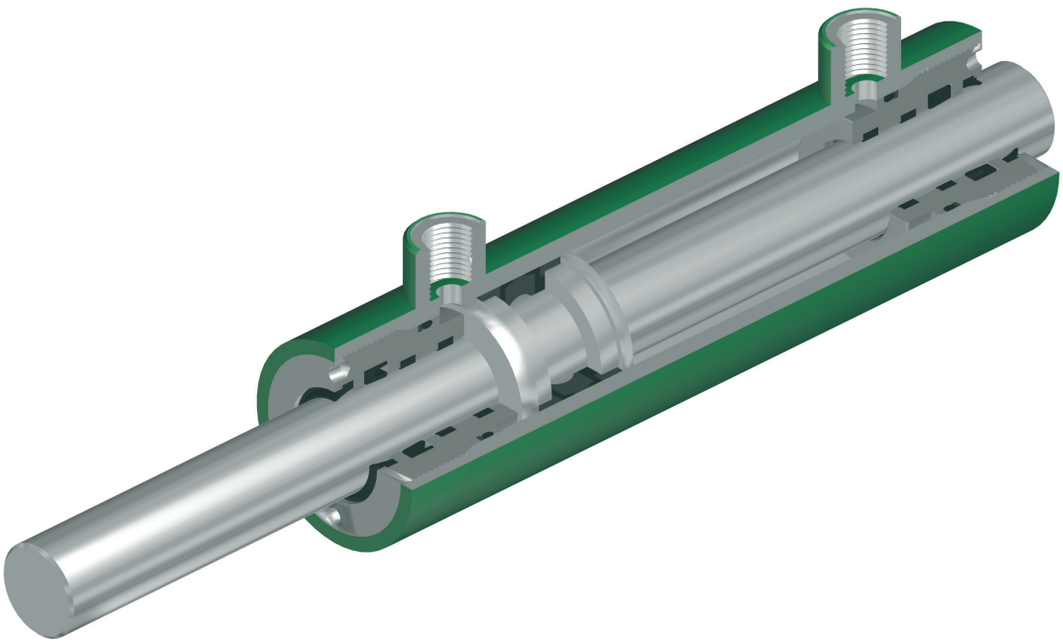

ZH1/2

Linear hydraulic motors of the ZH1/2 series

TECHNICAL DESCRIPTION - PRODUCT FUNCTION

The ZH1/2 linear hydraulic motor is the element that converts the pressure energy to the mechanical energy – to the axial power of the piston rod in both directions. They have – by their construction – no special demands for service and maintenance. It is necessary to obey the service and technical conditions for perfect and secure functionality.
The ZH1/2 is composed of the tube with precision worked inner diameter within the H8 allowance. On the tube there are welded the connection necks for inlet of the pressure oil with internal thread.
The lids for piston rod guidance with the sealing elements are screwed into the tube of cylinder cover from both sides. The piston rod is symmetric (through) and as at the previous types grinded, polished and chromed with the tolerance f7. This type of the piston rod secures constant speed and power ratio during the piston rod travel in both directions.

OPERATING CONDITIONS

The linear hydraulic motors of this kind do not require any special demands for service and maintenance.

- the mounting of LHM must be done under conditions preventing the damage of function parts and which secure the protection of inner space against penetration of impurities
- properly provide the connection of LHM to the pressure source (danger of oil pressure decrease) and the mounting of LHM into the kinematic system of the given machine/device
- the work position of LHM is optional if not otherwise specified
- radial load of the piston rod by external force or its rotations during working time are not allowed
- take care during the work to prevent the mechanical damages of the piston rod
- the hydraulic motor must not be loaded in the end positions by external force or by power of steady mass corresponding to 1.25 multiple of rated pressure
- when mounted into the machine's mechanical parts (or into some device) the possibility of swiveling of hydraulic cylinder body must be secured in transverse direction in the area of allowed swiveling of knuckle bearing
- LHM must not be exposed to any aggressive agents, aggressiveness of which would exceed the guaranteed resistance value for the motor piston rod used. The resistance value is specified in technical conditions.

TECHNICAL CONDITIONS

Work liquid	– hydraulic mineral oil (OH-HM 32, OH-HM 46, OH-HM 64)
Required filtration	– min. 40 μm, we recommend 25 μm
Temperature scope	– liquid -20°C ÷ +80°C
	– ambient -20°C ÷ +70°C
Climatic stability	– temperate climate WT
Rated pressure	– 20 MPa
Maximum pressure	– 25 MPa
Test pressure	– 32 MPa
Work speed	– maximum 0,5 $m \cdot s^{-1}$
The piston rod resistance value in the salt chamber pursuant to ISO 4540	– 120 hours

MARKING

Each hydraulic motor manufactured in our factory is marked with following data:

ZH1/2

HYDRAULICS SEHRADICE
ZH1/2 D/d x Z R / K /
MAX.OPERATING PRESSURE
SERIAL NUMBER

Part of the item delivery is the accompanying documentation containing

ITEM SAFEGUARD and
QUALITY CERTIFICATE /document details see page no. 97-98/.

ZH1/2 Series

for P_{max} 25 MPa

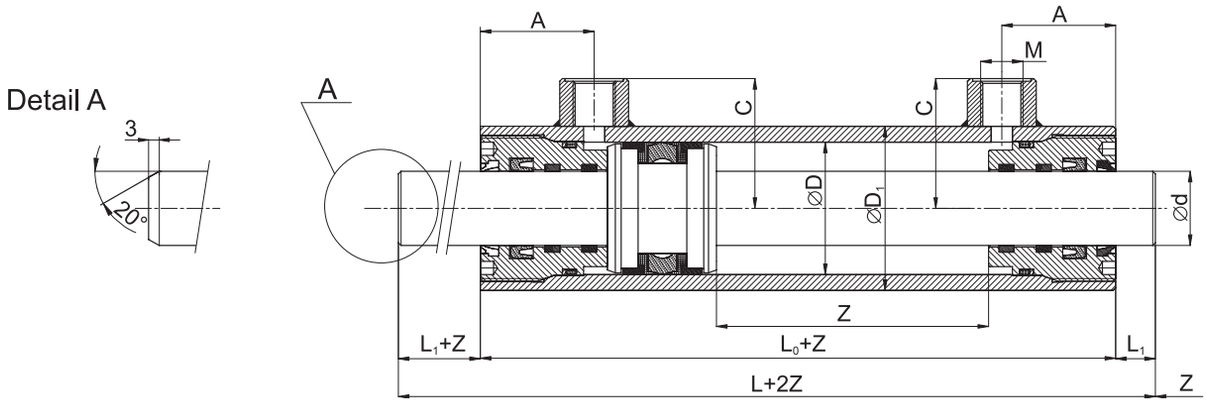

ØD	Ød	$ØD_1$	L	L_0	L_1	M	A	C	Weight under given lift Z
32	18	42	130	110	10	12x1.5	36	39	2.07 + Z x 0.00660
32	20	42	130	110	10	12x1.5	36	39	2.08 + Z x 0.00710
40	22	50	140	120	10	16x1.5	36	44	2.51 + Z x 0.00860
40	25	50	140	120	10	16x1.5	36	44	2.61 + Z x 0.00950
45	25	55	145	125	10	16x1.5	41	45.5	3.75 + Z x 0.01002
45	28	55	145	125	10	16x1.5	41	45.5	4.15 + Z x 0.01010
50	25	62	170	140	15	16x1.5	43	49	4.86 + Z x 0.01214
50	28	62	170	140	15	16x1.5	43	49	4.91 + Z x 0.01312
55	28	70	170	140	15	16x1.5	45	53	5.62 + Z x 0.01640
55	32	70	170	140	15	16x1.5	45	53	5.74 + Z x 0.01787
60	32	75	180	150	15	16x1.5	48	55.5	7.44 + Z x 0.01880
60	36	75	180	150	15	16x1.5	48	55.5	7.61 + Z x 0.02047
63	36	78	185	155	15	16x1.5	50	57	8.47 + Z x 0.02103
63	40	78	185	155	15	16x1.5	50	57	8.64 + Z x 0.02290
65	36	80	190	160	15	22x1.5	53	58	9.96 + Z x 0.02140
65	40	80	190	160	15	22x1.5	53	58	10.32 + Z x 0.02327
70	40	85	210	170	20	22x1.5	54	60.5	13.10 + Z x 0.02420
70	45	85	210	170	20	22x1.5	54	60.5	13.17 + Z x 0.02680
75	40	90	215	175	20	22x1.5	57	63	14.24 + Z x 0.02512
75	45	90	215	175	20	22x1.5	57	63	14.68 + Z x 0.02773
80	45	95	220	180	20	22x1.5	59	65.5	17.20 + Z x 0.02866
80	50	95	220	180	20	22x1.5	59	65.5	17.68 + Z x 0.03160
90	50	105	240	190	25	22x1.5	64	70.5	21.00 + Z x 0.03344
90	55	105	240	190	25	22x1.5	64	70.5	21.40 + Z x 0.03668
100	55	120	260	210	25	27x2	73	82	31.90 + Z x 0.04578
100	63	120	260	210	25	27x2	73	82	32.90 + Z x 0.05160
110	63	130	280	220	30	27x2	78	87	42.25 + Z x 0.05406
110	70	130	280	220	30	27x2	78	87	42.80 + Z x 0.05980

Piston rod lift according to the customer's wish.
Lifts higher than maximum recommended need to be controlled for the ultimate strength.

The standard end of the piston rod is referenced as ending according to detail A.

The weights are informative within scope of ± 5% in kg.

Linear hydraulic motors ZH1/2 gripping

Gripping ZH1/2 – A

Cylinder	D_1	D_2	B	∅d	n	L_0
32	67	50	10	8.4	4	110
40	98	80	12	8.4	6	120
45	103	85	12	10.5	6	125
50	113	95	13	10.5	6	140
55	118	100	13	10.5	6	140
60	128	108	13	10.5	6	150
63	138	115	15	13	6	155
65	138	115	15	13	6	160
70	148	120	15	13	6	170
75	155	130	16	15	6	175
80	168	140	18	15	6	180
90	178	150	20	15	6	190
100	200	170	20	17	6	210
110	210	180	22	17	6	220

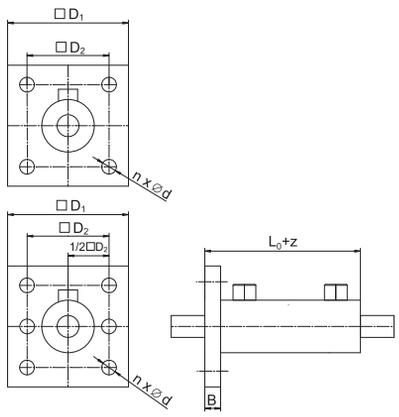

Gripping ZH1/2 – B

Cylinder	$∅D_1$	$∅D_2$	B	∅d	n	L_0
32	88	70	10	8.4	4	110
40	98	80	12	8.4	6	120
45	103	85	12	8.4	6	125
50	113	95	13	10.5	6	140
55	118	100	13	10.5	6	140
60	128	108	13	10.5	6	150
63	138	115	15	13	6	155
65	138	115	15	13	6	160
70	148	120	15	13	6	170
75	155	130	16	13	6	175
80	168	140	18	15	6	180
90	178	150	20	15	6	190
100	198	170	20	17	6	210
110	208	180	22	17	6	220

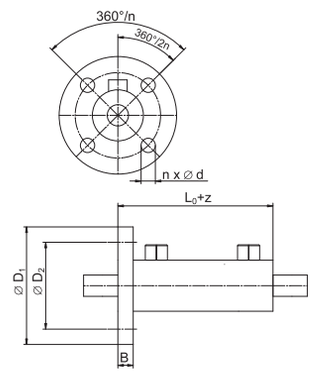

Gripping ZH1/2 – C

Cylinder	A	B h11	C	∅df8	E	F	Gx45°	H	K	L_0
32	90	55	28	20	53	17.5	1	5	19	110
40	105	65	28	20	65	20	1	5	19	120
45	110	70	33	25	70	20	1	5	22	125
50	120	80	33	25	80	20	1	5	22	140
55	135	90	35	25	90	22.5	1	5	23	140
60	140	95	35	25	95	22.5	1	7	25	150
63	150	100	40	30	100	25	1.5	7	27	155
65	155	105	40	30	100	25	1.5	7	27	160
70	160	110	40	30	105	25	1.5	7	27	170
75	180	120	45	35	115	30	1.5	7	30	175
80	185	125	45	35	115	30	1.5	8	31	180
90	205	135	50	40	135	35	1.5	8	33	190
100	220	150	55	45	150	35	1.5	10	38	210
110	240	160	60	50	160	40	1.5	10	40	220

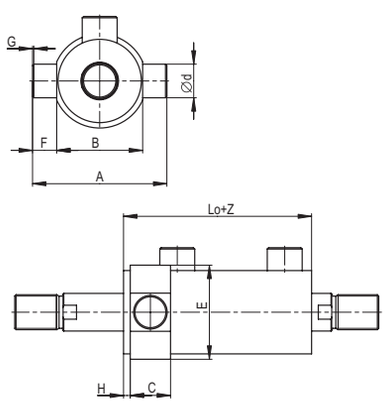

ZH1/2

Gripping ZH1/2 – D

Cylinder	B h11	C	∅d	E	F	G	H	L_0
32	20	15	10.5	65	88	10	27	110
40	24	20	10.5	75	100	12	31	120
45	24	20	13	80	105	12	35	125
50	24	20	13	88	110	14	38	140
55	26	20	13	98	123	16	43	140
60	30	25	15	107	135	16	47	150
63	30	25	15	110	138	18	50	155
65	30	25	15	110	138	18	50	160
70	34	27	17	118	150	20	55	170
75	34	27	17	125	158	20	55	175
80	40	30	21	140	180	24	60	180
90	40	30	21	150	190	24	65	190
100	48	34	25	170	215	26	75	210
110	48	34	25	180	230	26	80	220

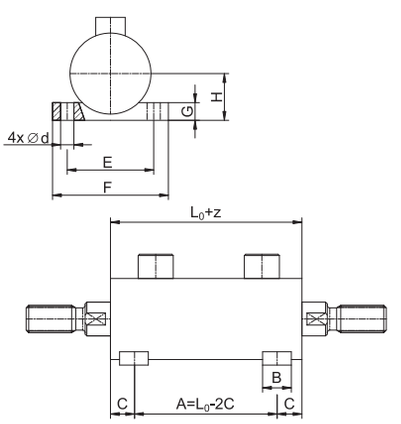

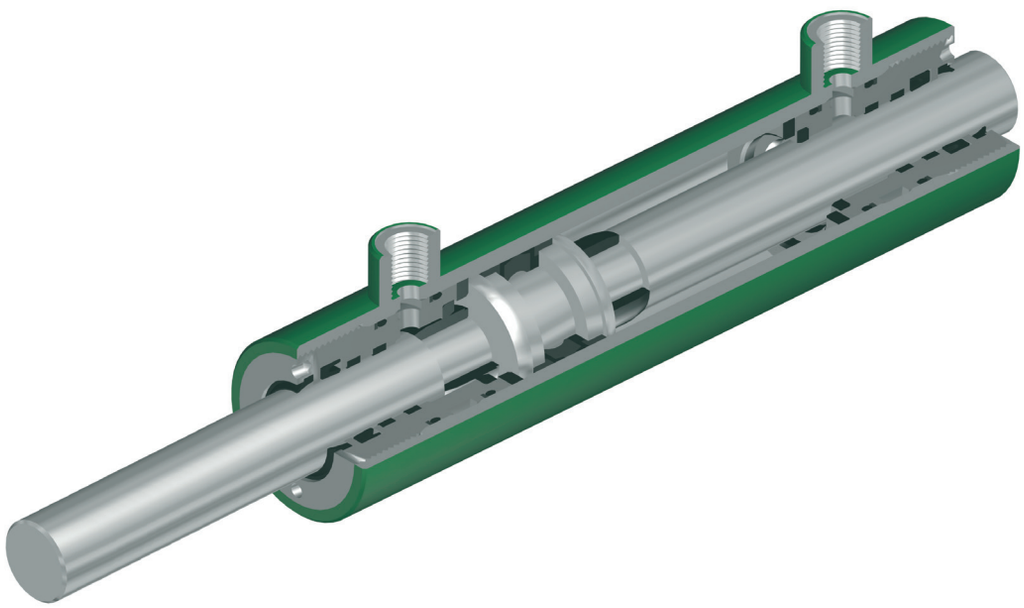

ZH1/2T

Linear hydraulic motors of the ZH1/2T series

TECHNICAL DESCRIPTION – PRODUCT FUNCTION

The ZH1/2T linear hydraulic motor is the element that converts the pressure energy to the mechanical energy – to the axial power of the piston rod in both directions. They have – by their construction – no special demands for service and maintenance. It is necessary to obey the service and technical conditions for perfect and secure functionality.
ZH2T is a hydraulic motor with non-regulated damping (reduction of the piston rod travel speed) in end positions - however, we may not guarantee the efficiency of damping. If precise damping is required, we must provide a custom design.
A hydraulic motor is assembled from a tube with precisely machined internal diameter, tolerance H8. On the tube there are welded the connection necks for inlet of the pressure oil with internal thread.
The lids for piston rod guidance with the sealing elements are screwed into the tube of cylinder cover from both sides. The piston rod is symmetric (through) and as at the previous types grinded, polished and chromed with the tolerance f7. This type of the piston rod secures constant speed and power ratio during the piston rod travel in both directions.

OPERATING CONDITIONS

The linear hydraulic motors of this kind do not require any special demands for service and maintenance.

- the mounting of LHM must be done under conditions preventing the damage of function parts and which secure the protection of inner space against penetration of impurities
- properly provide the connection of LHM to the pressure source (danger of oil pressure decrease) and the mounting of LHM into the kinematic system of the given machine/device
- the work position of LHM is optional if not otherwise specified
- radial load of the piston rod by external force or its rotations during working time are not allowed
- take care during the work to prevent the mechanical damages of the piston rod
- the hydraulic motor must not be loaded in the end positions by external force or by power of steady mass corresponding to 1.25 multiple of rated pressure
- when mounted into the machine's mechanical parts (or into some device) the possibility of swiveling of hydraulic cylinder body must be secured in transverse direction in the area of allowed swiveling of knuckle bearing
- LHM must not be exposed to any aggressive agents, aggressiveness of which would exceed the guaranteed resistance value for the motor piston rod used. The resistance value is specified in technical conditions.

TECHNICAL CONDITIONS

Work liquid	– hydraulic mineral oil (OH-HM 32, OH-HM 46, OH-HM 64)
Required filtration	– min. 40 μm, we recommend 25 μm
Temperature scope	– liquid -20°C ÷ +80°C
	– ambient -20°C ÷ +70°C
Climatic stability	– temperate climate WT
Rated pressure	– 20 MPa
Maximum pressure	– 25 MPa
Test pressure	– 32 MPa
Work speed	– maximum 0,5 $m \cdot s^{-1}$
The piston rod resistance value in the salt chamber pursuant to ISO 4540	– 120 hours

MARKING

Each hydraulic motor manufactured in our factory is marked with following data:

HYDRAULICS SEHRADICE
ZH1/2T D/d x Z R / K /
MAX.OPERATING PRESSURE
SERIAL NUMBER

Part of the item delivery is the accompanying documentation containing

ITEM SAFEGUARD and
QUALITY CERTIFICATE /document details see page no. 97-98/.

ZH1/2T Series

for P_{max} 25 MPa

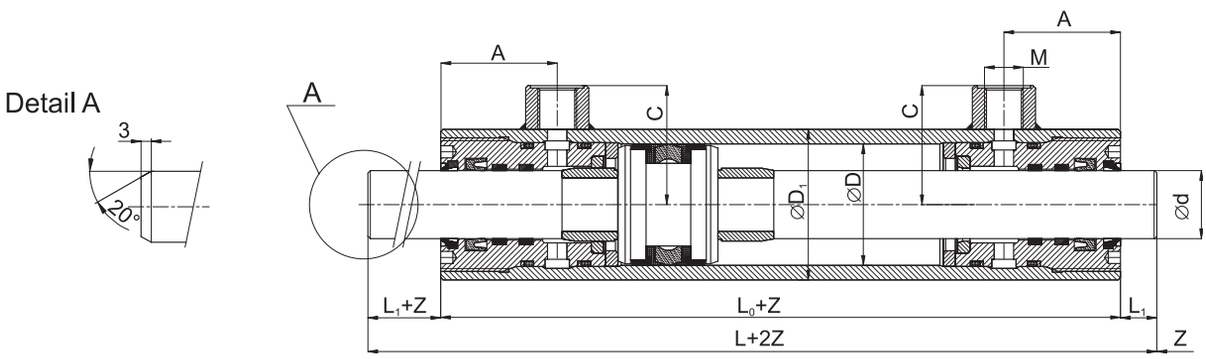

ØD	Ød	$ØD_1$	L	L_0	L_1	M	A	C	Weight under given lift Z
32	18	42	160	140	10	12x1,5	40	39	2,63 + Z x0,00660
32	20	42	160	140	10	12x1,5	40	39	2,70 + Z x0,00710
40	22	50	170	150	10	16x1,5	40	44	3,37 + Z x0,00860
40	25	50	170	150	10	16x1,5	40	44	3,52 + Z x0,00950
45	25	55	175	155	10	16x1,5	45	45,5	5,29 + Z x0,01002
45	28	55	175	155	10	16x1,5	45	45,5	5,40 + Z x0,01010
50	25	62	210	180	15	16x1,5	48	49	6,48 + Z x0,01214
50	28	62	210	180	15	16x1,5	48	49	6,54 + Z x0,01312
55	28	70	210	180	15	16x1,5	50	53	7,49 + Z x0,01640
55	32	70	210	180	15	16x1,5	50	53	7,65 + Z x0,01787
60	32	75	220	190	15	16x1,5	53	55,5	9,30 + Z x0,01880
60	36	75	220	190	15	16x1,5	53	55,5	9,51 + Z x0,02047
63	36	78	230	200	15	16x1,5	55	57	10,59 + Z x0,02103
63	40	78	230	200	15	16x1,5	55	57	10,80 + Z x0,02290
65	36	80	240	210	15	22x1,5	58	58	12,45 + Z x0,02140
65	40	80	240	210	15	22x1,5	58	58	12,90 + Z x0,02327
70	40	85	260	220	20	22x1,5	60	60,5	15,90 + Z x0,02420
70	45	85	260	220	20	22x1,5	60	60,5	16,06 + Z x0,02680
75	40	90	275	235	20	22x1,5	63	63	17,80 + Z x0,02512
75	45	90	275	235	20	22x1,5	63	63	18,35 + Z x0,02773
80	45	95	280	240	20	22x1,5	65	65,5	21,40 + Z x0,02866
80	50	95	280	240	20	22x1,5	65	65,5	22,10 + Z x0,03160
90	50	105	310	260	25	22x1,5	70	70,5	26,25 + Z x0,03344
90	55	105	310	260	25	22x1,5	70	70,5	26,71 + Z x0,03668
100	55	120	340	290	25	27x2	80	82	38,84 + Z x0,04578
100	63	120	340	290	25	27x2	80	82	39,92 + Z x0,05160
110	63	130	360	300	30	27x2	85	87	49,06 + Z x0,05406
110	70	130	360	300	30	27x2	85	87	49,96 + Z x0,05980

Piston rod lift according to the customer's wish.
Lifts higher than maximum recommended need to be controlled for the ultimate strength.

The standard end of the piston rod is referenced as ending according to detail A.

The weights are informative within scope of ± 5% in kg.

Linear hydraulic motors ZH1/2T gripping

Gripping ZH1/2T – A

Cylinder	D_1	D_2	B	Ød	n	L_0
32	67	50	10	8.4	4	140
40	98	80	12	8.4	6	150
45	103	85	12	10.5	6	155
50	113	95	13	10.5	6	180
55	118	100	13	10.5	6	180
60	128	108	13	10.5	6	190
63	138	115	15	13	6	200
65	138	115	15	13	6	210
70	148	120	15	13	6	220
75	155	130	16	15	6	235
80	168	140	18	15	6	240
90	178	150	20	15	6	260
100	200	170	20	17	6	290
110	210	180	22	17	6	300

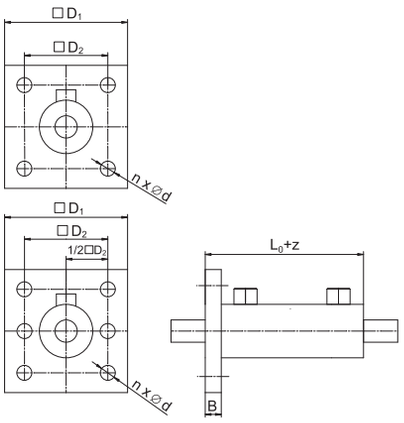

Gripping ZH1/2T – B

Cylinder	$ØD_1$	$ØD_2$	B	Ød	n	L_0
32	88	70	10	8.4	4	140
40	98	80	12	8.4	6	150
45	103	85	12	8.4	6	155
50	113	95	13	10.5	6	180
55	118	100	13	10.5	6	180
60	128	108	13	10.5	6	190
63	138	115	15	13	6	200
65	138	115	15	13	6	210
70	148	120	15	13	6	220
75	155	130	16	13	6	235
80	168	140	18	15	6	240
90	178	150	20	15	6	260
100	198	170	20	17	6	290
110	208	180	22	17	6	300

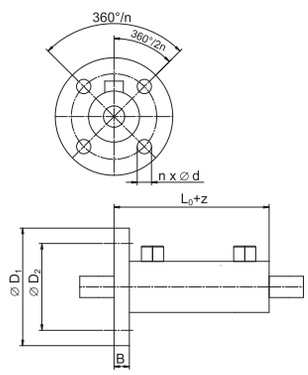

Gripping ZH1/2T – C

Cylinder	A	B h11	C	Ødf8	E	F	Gx45°	H	K	L_0
32	90	55	28	20	53	17.5	1	5	19	140
40	105	65	28	20	65	20	1	5	19	150
45	110	70	33	25	70	20	1	5	22	155
50	120	80	33	25	80	20	1	5	22	180
55	135	90	35	25	90	22.5	1	5	23	180
60	140	95	35	25	95	22.5	1	7	25	190
63	150	100	40	30	100	25	1.5	7	27	200
65	155	105	40	30	100	25	1.5	7	27	210
70	160	110	40	30	105	25	1.5	7	27	220
75	180	120	45	35	115	30	1.5	7	30	235
80	185	125	45	35	115	30	1.5	8	31	240
90	205	135	50	40	135	35	1.5	8	33	260
100	220	150	55	45	150	35	1.5	10	38	290
110	240	160	60	50	160	40	1.5	10	40	300

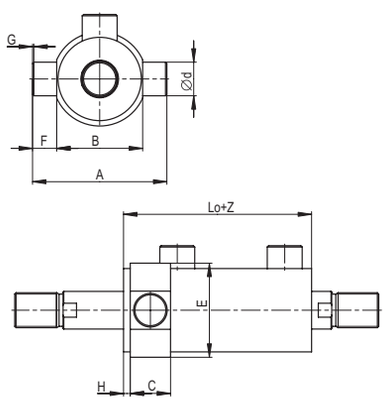

Gripping ZH1/2T – D

Cylinder	B h11	C	Ød	E	F	G	H	L_0
32	20	15	10.5	65	88	10	27	140
40	24	20	10.5	75	100	12	31	150
45	24	20	13	80	105	12	35	155
50	24	20	13	88	110	14	38	180
55	26	20	13	98	123	16	43	180
60	30	25	15	107	135	16	47	190
63	30	25	15	110	138	18	50	200
65	30	25	15	110	138	18	50	210
70	34	27	17	118	150	20	55	220
75	34	27	17	125	158	20	55	235
80	40	30	21	140	180	24	60	240
90	40	30	21	150	190	24	65	260
100	48	34	25	170	215	26	75	290
110	48	34	25	180	230	26	80	300

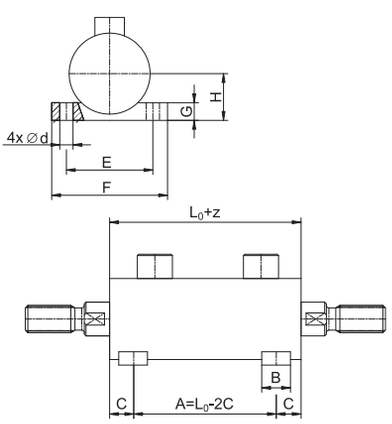

Piston rod end for hydraulic motors ZH1/2, ZH1/2T

Variant: no. 2, 3 - we recommend to design according to lifting eyes (page 75÷90)

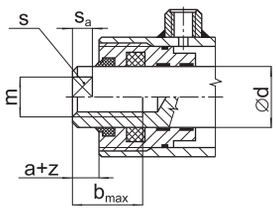

internal thread **variant 2**

Ød		20	22	25	28	32	36	40	45	50	55	63	70
m		**14x1.5**	**16x1.5**	**18x1.5**	**20x1.5**	**24x1.5**	**24x1.5**	**27x2**	**27x2**	**30x2**	**36x2**	**42x2**	**42x2**
				20x1.5			27x2		30x2	36x2	42x2		52x2
a		12	12	15	17	17	20	20	20	25	25	30	30
b_{max}		40	40	56	56	60	70	70	70	80	90	90	100
s		18	19	22	24	28	30	36	38	41	46	55	60
								32	41	46	50	60	65
Sa		8	8	10	12	12	15	15	15	18	18	20	20

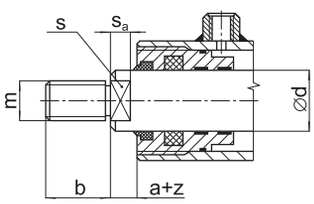

external thread **variant 3**

Ød	18	20	22	25	28	32	36	40	45	50	55	63	70
m	**16x1.5**	16x1.5	16x1.5	18x1.5	20x1.5	**24x1.5**	24x1.5	27x2	27x2	30x2	36x2	**42x2**	42x2
		18x1.5	**18x1.5**	**20x1.5**	**22x1.5**		**27x2**	**30x2**	**30x2**	**36x2**	**42x2**		**52x2**
a	12	12	12	15	17	17	20	20	20	25	25	30	30
b	20	20	20	30	30	34	40	40	40	45	50	60	60
		30	30		34	40		45	45	50			
s	16	18	19	22	24	30	32	36	41	46	50	60	65
Sa	8	8	8	10	12	12	15	15	15	18	18	20	20

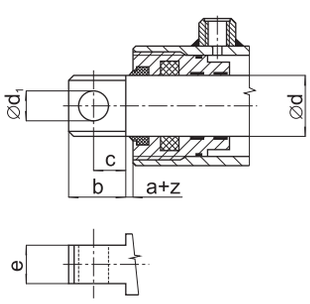

neck hole **variant 4**

Ød	18	20	22	25	28	32	36	40	45	50	55	63	70
$Ød_1$	10	12	12	14	15	17	20	22	26	28	30	40	50
a	6	6	8	8	8	10	10	12	12	15	15	18	18
b	25	30	35	40	45	50	60	70	80	95	100	120	135
c	15	18	22	25	29	31	36	43	50	59	64	80	85
e	13	15	16	18	20	24	26	28	32	34	38	40	46

$Ød_1$ – max. hole for p = 25 MPa

The highlighted dimensions are default.

Ordering code

For standard linear hydraulic motors
ZH1/2 a ZH1/2T Series
Acc. to the table on page 45, 49.

And for linear hydraulic motors using the construction module L_0 and another then standard piston rods ends and connection eyes ends.

[ ] – [ ] / [ ] x [ ] – [ ] – [ ] / [ ]

Cylinder cover eye marking – (in case of not employing any eye from our catalogue fill in 0 to the code) – page 75÷90.

Piston rod eye marking – (in case of not employing any eye from our catalogue fill in 0 to the code) – page 75÷90.

Piston rod end – (for single solution without rod eye the highlighted dimensions are valid. In case of not employing any eye from our catalogue fill in 0 to the code) – page 51.

Lift – due to Your actual need – it is necessary to check the maximal possible lift because of the ultimate strength – the diagram of ultimate strength can be helpful according to Euler page 93.

ZH1/2,
ZH1/2 – A,
ZH1/2 – B,
ZH1/2 – C,
ZH1/2 – D,
ZH1/2T,
ZH1/2T – A,
ZH1/2T – B,
ZH1/2T – C,
ZH1/2T – D,

Piston rod diameter

∅D	∅d	∅D_1	L
32	18	42	130
40	22	50	140

Rated diameter of cylinder

∅D	∅d	∅D_1	L
32	18	42	130
40	22	50	140

Example:

ZH1/2–D–70/40x400–4–0–0

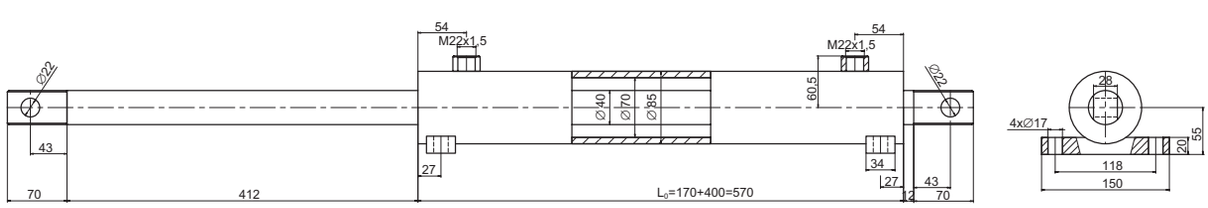

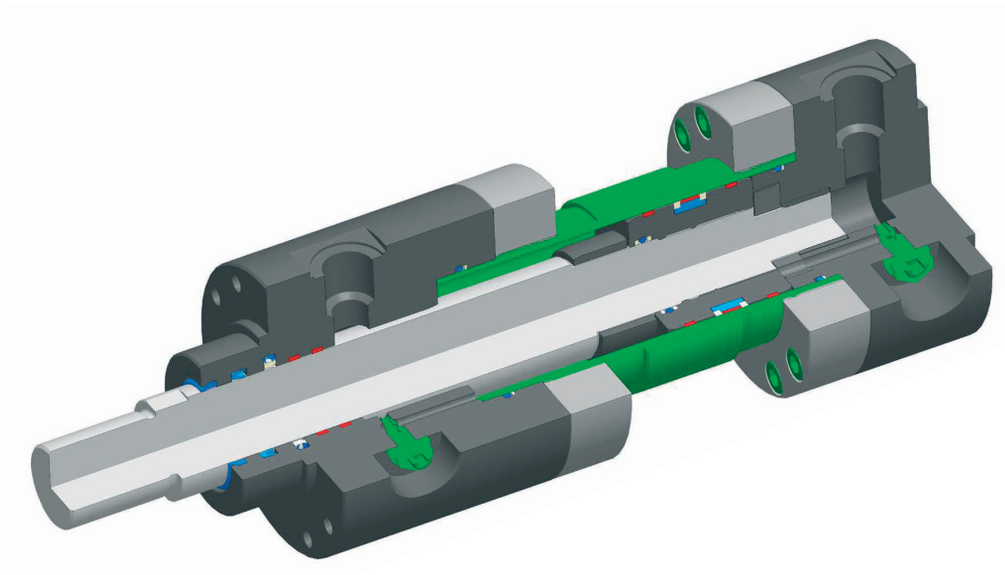

Linear Hydraulic Motors ISO 6022

TECHNICAL DESCRIPTION - PRODUCT FEATURES

Similar to previous products, also a linear hydraulic motor according to ISO 6022 transforms the pressure energy to the mechanical axial force of the piston rod in both directions. Due to its design, there are no special requirements for attendance and servicing. To ensure save and trouble-free operation, operational and technical conditions must be complied with.
A linear hydraulic motor according to ISO 6022 is equipped with end position regulated dumpers, and it enables regulated decrease of the piston rod movement speed, thus limiting end position shocks.
Its massive design and its non-welded construction ensures operation under the most demanding operational conditions, namely service life wise.
The pressure strength of the ISO 6022 line motor is designed for 25 MPa of the operational pressure. If adhering to technical conditions and max. stroke check, it is possible to increase the operational pressure limit to 30 MPa.
The motor is assembled from precisely machined elements, which are assembled, by means of fittings, to an assembly (threaded bolts and flanges).
This so-called flanged design is advantageous from the viewpoint of subsequent disassembly, e.g. servicing when replacing seals.
The basic dimensions, such as piston diameter, piston rod diameter, dimensions of mounting flanges, taps and loops correspond to the ISO 6022 standard.

OPERATING CONDITIONS

Linear hydraulic motors ISO 6022 do not require any special conditions for maintenance and operation.

- LHM must be assembled under conditions, which limit any damage to functional elements, and the internal space must be protected against any impurity infiltrations.
- LHM must be thoroughly connected to the pressure source (hazard of pressure oil leakage) and LHM must be well fitted to the kinematics system of the respective machinery.
- LHM can operate in any position, unless provided for otherwise.
- Any piston rod radial load by an external force (as well as by a radial force evoked by deflection of LHM due to its own weight) or any piston rod rotational movement during the work cycle are not permitted.
- When in operation, no mechanical damage to the piston rod may occur.
- In its end positions, the hydraulic motor may not be subjected to external forces or to inertia mass forces exceeding the 1.25 multiple of the nominal pressure.
- when fitted to mechanical parts of the machinery or equipment, free incline of the hydraulic cylinder body in the lateral direction within the extent of permitted incline of the hinge bearing must be ensured.
- During operation, hinge bearings must be regularly and sufficiently lubricated.
- To operate properly, it is required to bleed the LHM in the hydraulic system.
- LHM must not be exposed to any aggressive agents, aggressiveness of which would exceed the guaranteed resistance value for the motor piston rod used. The resistance value is specified in technical conditions.

TECHNICAL CONDITIONS

Working liquid	– hydraulic mineral oil (OH-HM32, OH-HM46, OH-HM64).
Required filtration	– min. 40 μm, we recommend 25 μm
Temperature range	– liquid -20°C ÷ +80°C
	– ambient -20°C ÷ +70°C
Climate resistance	– mild climate WT
Rated pressure	– 20MPa
Maximum pressure	– 25MPa (30MPa)
Test pressure	– 32MPa
Working speed	– max. 0,5 m. s-1
The piston rod resistance value in the salt chamber pursuant to ISO 4540	– 120 hours

PRODUCT MARKING

Each hydraulic motor manufactured is marked with the following data:

HYDRAULICS SEHRADICE
ORDER CODE
MAX. OPERATING PRESSURE
SERIAL NUMBER

The product is supplied with accompanying documentation, containing:

PRODUCT DOCUMENTATION and
PRODUCT QUALITY CERTIFICATE /documentation details see page no. 97-98/.

ORDER CODE

1	2	3	4	5	6	7	8	9	10	11	12	13	14	15	16	17	18
ISO6022	A	80	56	230	M	0	0	1	1	S	O	O	3	3	S	N	O

A
MF3
MF4
MT4
MS2
MP3, MP5, MP6
MP5H, MP6H

piston nominal diameter d in mm

piston rod diameter MM in mm

stroke Z in mm
check brace bar resistance

M pressure intake, metric thread
G pressure intake, pipe thread

PRESSURE INTAKE POSITION - FRONT LID
0 specifies the angle of rotation in respect to index plane 0°
1 specifies the angle of rotation in respect to index plane 30°
2 specifies the angle of rotation in respect to index plane 60°
3 specifies the angle of rotation in respect to index plane 90°
4 specifies the angle of rotation in respect to index plane 120°
5 specifies the angle of rotation in respect to index plane 150°
6 specifies the angle of rotation in respect to index plane 180°
7 specifies the angle of rotation in respect to index plane 210°
8 specifies the angle of rotation in respect to index plane 240°
9 specifies the angle of rotation in respect to index plane 270°
10 specifies the angle of rotation in respect to index plane 300°
11 specifies the angle of rotation in respect to index plane 330°

PRESSURE INTAKE POSITION - BACK LID
0 specifies the angle of rotation of planes 0°
1 specifies the angle of rotation of planes 30°
2 specifies the angle of rotation of planes 60°
3 specifies the angle of rotation of planes 90°
4 specifies the angle of rotation of planes 120°
5 specifies the angle of rotation of planes 150°
6 specifies the angle of rotation of planes 180°
7 specifies the angle of rotation of planes 210°
8 specifies the angle of rotation of planes 240°
9 specifies the angle of rotation of planes 270°
10 specifies the angle of rotation of planes 300°
11 specifies the angle of rotation of planes 330°

BLEEDER POSITION - FRONT LID
1 specifies the angle of rotation in respect to the pressure intake 90°
2 specifies the angle of rotation in respect to the pressure intake 180°
3 specifies the angle of rotation in respect to the pressure intake 270°

BLEEDER POSITION - BACK LID
1 specifies the angle of rotation in respect to the pressure intake 90°
2 specifies the angle of rotation in respect to the pressure intake 180°
3 specifies the angle of rotation in respect to the pressure intake 270°

NOTE
O no remark
XV distance in mm description

SURFACE FINISH
N standard coat SYNTETIC COAT RAL 9005
S SYNTETIC COAT RAL to be filled in :
O no surface treatment

SEALS
SUITABLE FOR MINERAL OILS
S standard sealing system
U to prevent low pressure leakage
T low friction *
CH ribbed sleeves **

SUITABLE FOR PHOSPHORIC ESTERS
SE standard sealing system
UE to prevent low pressure leakage
TE low friction *
CHE ribbed sleeves **

CONTORL ELEMENT POSITION – BACK LID
1 specifies the angle of rotation in respect to the pressure intake 90°
2 specifies the angle of rotation in respect to the pressure intake 180°
3 specifies the angle of rotation in respect to the pressure intake 270°

CONTORL ELEMENT POSITION – FRONT LID
1 specifies the angle of rotation in respect to the pressure intake 90°
2 specifies the angle of rotation in respect to the pressure intake 180°
3 specifies the angle of rotation in respect to the pressure intake 270°

DAMPING OF END POSITIONS WITH REGULATION
B no damping
O damping on both ends
V above-piston damping – annulus
Z below-piston damping

PISTON ROD TERMINATION
O external thread according to ISO 6022
I piston rod loops pursuant to ISO 6022
H piston rod loop standard HYDRAULICS

PISTON ROD QUALITY
S standard – strength up to Rm = 500 MPa
salt-spray cabinet 100 hours pursuant to CSN ISO 9227
H Hiper – strength upto Rm = 500 MPa
salt-spray cabinet 200 hours pursuant to CSN ISO 9227
N NiCr350 – strength up to Rm = 500 MPa
salt-spray cabinet 350 hours pursuant to CSN ISO 9227
SV 42CrMo4V – strength up to Rm = 900 MPa
salt-spray cabinet 100 hours pursuant to CSN ISO 9227
SVK 42Cr-IH – strength up to Rm = 900 MPa, surface hardening
salt-spray cabinet 100 hours pursuant to CSN ISO 9227
NER strength at request, based on the semi-product Cr layer of 20 um

* in combination with leakage opening
** external design must be approved

Linear Hydraulic Motors according to ISO 6022

A

A
(ACCORDING TO DIN 24333, VARIANT A)

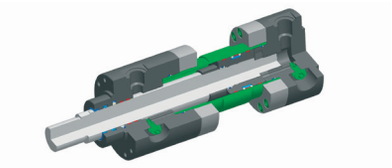

MF3

MF3
(ACCORDING TO DIN 24333, VARIANT CA)

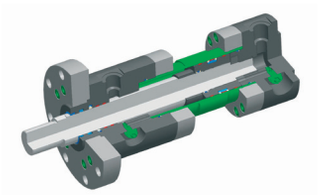

MF4

MF4
(ACCORDING TO DIN 24333, VARIANT CB)

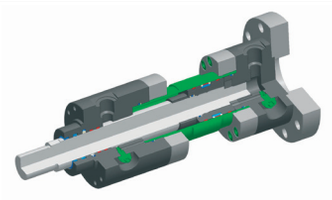

MT4

MT4
(ACCORDING TO DIN 24333, VARIANT B)

MS2

MS2

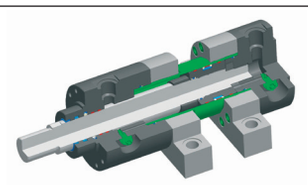

MP3, MP5, MP6

MP3, MP5, MP6
(ACCORDING TO DIN 24333, VARIANT DA)

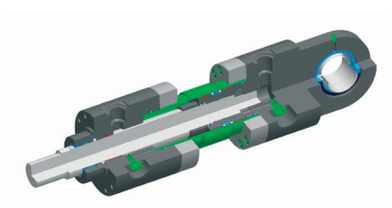

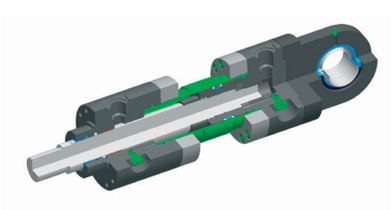

MP5
fixed loop with hinge bearings
pursuant to ISO 6022

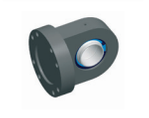

MP6
fixed loop with hinge bearings
pursuant to ISO 6022
(permitted codes of pressure supply
position on the back cover - 0, 3, 6, 9)

MP3
fixed loop with slide sleeve
pursuant to ISO 6022

MP5H
fixed loop with standard
hinge bearing HYDRAULICS

MP6H
adjustable loop with standard
hinge bearing HYDRAULICS
(permitted codes of pressure supply
position on the back cover - 0, 3, 6, 9)

MP3, MP5, MP6

PRESSURE INLET POSITION
view from side of piston rod travel

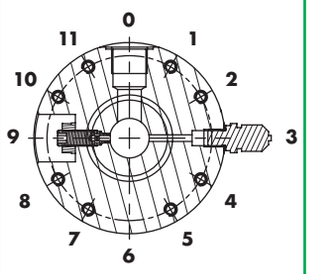

BLEEDER POSITION
view from side of piston rod travel

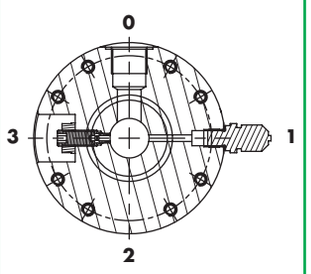

POSITION OF DAMPING CONTROL ELEMENT
view from side of piston rod travel

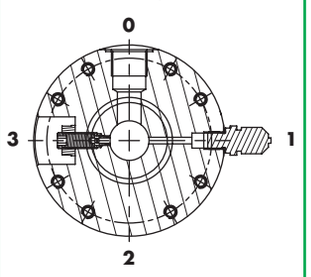

TABLE OF FORCES OF LINEAR HYDRAULIC MOTORS BY PRESSURES

		operating pressure 20 MPa		operating pressure 25 MPa		surface		Travel-in efficiency	Travel-out efficiency	Ratio of surfaces A1/A2
∅d	∅ MM	travel-out force (kN)	travel-in force (kN)	travel-out force (kN)	travel-in force (kN)	(A1) piston (cm^2)	(A2) circular ring (cm^2)			
50	32	37.68	21.78	47.10	27.23	19.63	11.59	0.94	0.96	1.69
50	36	37.68	17.77	47.10	22.21	19.63	9.45	0.94	0.96	2.08
63	40	59.82	34.96	74.78	43.70	31.16	18.60	0.94	0.96	1.68
63	45	59.82	28.69	74.78	35.86	31.16	15.26	0.94	0.96	2.04
80	50	96.46	57.56	120.58	71.95	50.24	30.62	0.94	0.96	1.64
80	56	96.46	48.17	120.58	60.21	50.24	25.62	0.94	0.96	1.96
100	63	150.72	89.01	188.40	111.26	78.50	47.34	0.94	0.96	1.66
100	70	150.72	75.27	188.40	94.08	78.50	40.04	0.94	0.96	1.96
125	80	235.50	136.14	294.38	170.18	122.66	72.42	0.94	0.96	1.69
125	90	235.50	111.05	294.38	138.82	122.66	59.07	0.94	0.96	2.08
140	90	295.41	169.72	369.26	212.15	153.86	90.28	0.94	0.96	1.70
140	100	295.41	141.68	369.26	177.10	153.86	75.36	0.94	0.96	2.04
160	100	385.84	230.22	482.30	287.78	200.96	122.46	0.94	0.96	1.64
160	110	385.84	199.23	482.30	249.04	200.96	105.98	0.94	0.96	1.90
180	110	488.33	299.59	610.42	374.48	254.34	159.36	0.94	0.96	1.60
180	125	488.33	247.57	610.42	309.46	254.34	131.68	0.94	0.96	1.93
200	125	602.88	359.73	753.60	449.66	314.00	191.34	0.94	0.96	1.64
200	140	602.88	301.06	753.60	376.33	314.00	160.14	0.94	0.96	1.96
250	160	942.00	544.57	1177.50	680.71	490.63	289.67	0.94	0.96	1.69
250	180	942.00	444.22	1177.50	555.27	490.63	236.29	0.94	0.96	2.08
320	200	1543.37	920.90	1929.22	1151.12	803.84	489.84	0.94	0.96	1.64
320	220	1543.37	796.93	1929.22	996.17	803.84	423.90	0.94	0.96	1.90

* Specified piston rod travel-out and travel-in forces are multiplied by the efficiency parameter

TABLE OF PERMISSIBLE VARIANTIONS OF DIMENSIONS OF LINEAR HYDRAULIC MOTORS

dimension specification	ZJ*	WF	WC	ZP*	XC,XD,XO,XN*	XV
STROKE			PERMISSIBLE VARIATION (mm)			
≤1250 mm	±1,5	±2	±2	±1,5	±1,5	±2
>1250 ≤ 3150mm	±3	±4	±4	±3	±3	±4
>3150 ≤ 8000mm	±5	±8	±8	±5	±5	±8

* The length is including the piston stroke.
The piston stroke tolerance specified in the bellow-mentioned table (tolerance of strokes of linear hydraulic motors) may not be added to the tolerance in this table.

TABLE OF PERMISSIBLE TOLERANCES OF STROKES OF LINEAR HYDRAULIC MOTORS

NOMINAL STROKE	PERMISSIBLE VARIATION
≤1250 mm	+2 mm / 0 mm
>1250 ≤ 3150 mm	+5 mm / 0 mm
>3150 ≤ 8000 mm	+8 mm / 0 mm

A - hydraulic motor basic module

for P_{max} 25 MPa

A

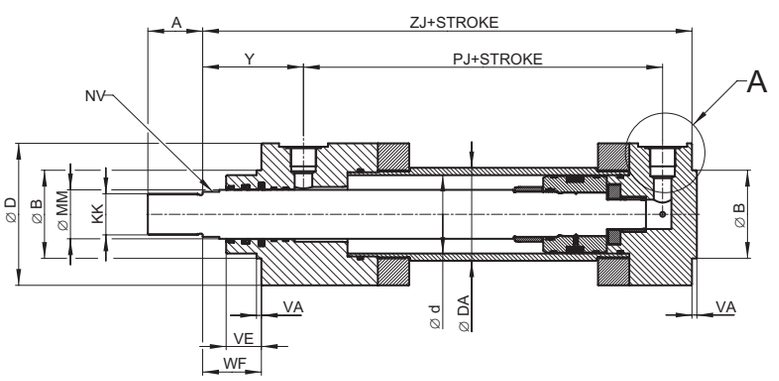

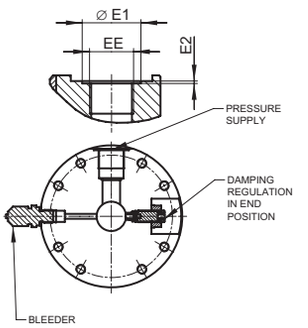

Ød	Ø MM	KK 6g	EE_M (Metric)	EE_G (Pipe)	ZJ	A	Y	PJ	WF	VE	NV	ØD	ØDA	VA	n	ØFB	ØD2	ØB	ØE1	E2	STROKE min.	Max. reccomended stroke	Stroke weight Z (kg)
50	32	M27x2	M22x1,5	G1/2	240	36	90	130	47	29	30	102	62	4	8	10	81	63	29	1	60	330	11,98 + Z x0,0145
50	36	M27x2	M22x1,5	G1/2	240	36	90	130	47	29	32	102	62	4	8	10	81	63	29	1	60	470	12,01 + Z x0,0161
63	40	M33x2	M27x2	G3/4	270	45	99	141	53	32	36	120	78	4	8	10	100	75	36	1,5	72	430	19,10 + Z x0,0230
63	45	M33x2	M27x2	G3/4	270	45	99	141	53	32	41	120	78	4	8	10	100	75	36	1,5	72	600	19,23 + Z x0,0255
80	50	M42x2	M27x2	G3/4	300	56	103	167	60	36	46	145	95	5	8	10	125	90	36	1,5	72	550	31,00 + Z x0,0320
80	56	M42x2	M27x2	G3/4	300	56	103	167	60	36	50	145	95	5	8	10	125	90	36	1,5	72	750	31,12 + Z x0,0350
100	63	M48x2	M33x2	G1	335	63	110	185	68	41	60	170	120	5	8	16	140	110	43	1,5	74	730	47,45 + Z x0,0500
100	70	M48x2	M33x2	G1	335	63	110	185	68	41	65	170	120	5	8	16	140	110	43	1,5	74	970	47,42 + Z x0,0572
125	80	M64x3	M33x2	G1	390	85	131	209	76	45	70	206	150	6	12	16	125	132	43	1,5	100	970	82,80 + Z x0,0816
125	90	M64x3	M33x2	G1	390	85	131	209	76	45	80	206	150	6	12	16	125	132	43	1,5	100	1310	83,05 + Z x0,0925
140	90	M72x3	M42x2	G11/4	425	90	131	234	76	48	80	231	170	6	12	16	200	145	49	2	110	1150	108,70 + Z x0,1000
140	100	M72x3	M42x2	G11/4	425	90	131	234	76	48	90	231	170	6	12	16	200	145	49	2	110	1500	114,10 + Z x0,1190
160	100	M80x3	M42x2	G11/4	460	95	140	250	85	50	90	265	190	7	12	16	220	160	49	2	135	1190	162,90 + Z x0,1270
160	110	M80x3	M42x2	G11/4	460	95	140	250	85	50	100	265	190	7	12	16	220	160	49	2	135	1530	163,60 + Z x0,1390
180	110	M90x3	M42x2	G11/4	497	106	155	257	95	55	*	292	210	8	12	20	245	185	49	2	150	1260	211,90 + Z x0,1680
180	125	M90x3	M42x2	G11/4	497	106	155	257	95	55	*	292	210	8	12	20	245	185	49	2	150	1770	215,10 + Z x0,1830
200	125	M100x3	M42x2	G11/4	540	112	161	294	101	61	*	306	245	10	16	20	260	200	49	2	180	1500	264,60 + Z x0,1850
200	140	M100x3	M42x2	G11/4	540	112	161	294	101	61	*	306	245	10	16	20	260	200	49	2	180	2010	262,30 + Z x0,2170
250	160	M125x4	M60x2	G11/2	640	125	198	347	113	71	*	400	300	12	20	24	341	250	70	2,5	195	2020	533,30 + Z x0,3260
250	180	M125x4	M60x2	G11/2	640	125	198	347	113	71	*	400	300	12	20	24	341	250	70	2,5	195	2720	534,70 + Z x0,3680
320	200	M160x4	M60x2	G11/2	750	160	226	414	136	88	*	490	395	14	24	24	440	320	70	2,5	275	2480	959,00 + Z x0,5100
320	220	M160x4	M60x2	G11/2	750	160	226	414	136	88	*	490	395	14	24	24	440	320	70	2,5	275	3150	962,00 + Z x0,5600

* Piston rod with openings for hook spanner.

* Dimensions "D2", "FB" and "n" are for cap-side and for cover-side.

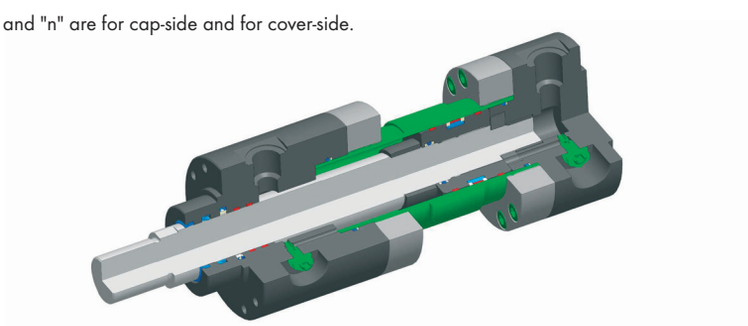

Weights specified are informative, ± 5%, specified in KGs
Custom piston rod stroke, for larger strokes check for ultimate resistance required.
Strokes lower than minimum are supplied with cylinder external fitting with minimum stroke (internal stroke limitation)

MF3 - flange on side of piston rod travel-out

for P_{max} 25 MPa

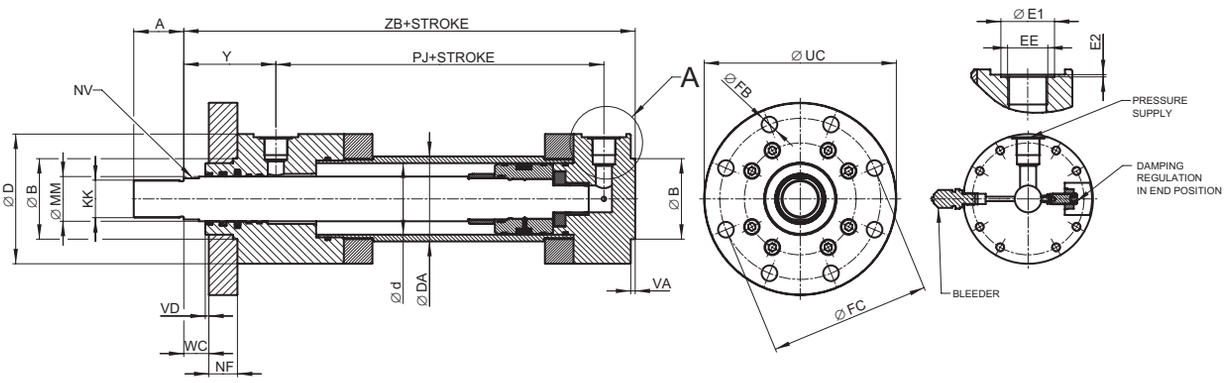

⌀d	⌀ MM	KK 6g	EE_M (Metric)	EE_G (Pipe)	ZB	A	⌀D	⌀DA	WC	VD min	FB H13	FC js13	⌀B H8/f8	Y	PJ	NV	UC	NF js13	⌀E1	E2	STROKE min.	Stroke weight Z (kg)
50	32	M27x2	M22x1,5	G1/2	244	36	102	62	22	4	13,5	132	63	90	130	30	160	25	29	1	60	14,75 + Z x0,0145
50	36	M27x2	M22x1,5	G1/2	244	36	102	62	22	4	13,5	132	63	90	130	32	160	25	29	1	60	14,78 + Z x0,0161
63	40	M33x2	M27x2	G3/4	274	45	120	78	25	4	13,5	150	75	99	141	36	180	28	36	1,5	72	23,10 + Z x0,0230
63	45	M33x2	M27x2	G3/4	274	45	120	78	25	4	13,5	150	75	99	141	41	180	28	36	1,5	72	23,23 + Z x0,0255
80	50	M42x2	M27x2	G3/4	305	56	145	95	28	4	17,5	180	90	103	167	46	215	32	36	1,5	72	37,60 + Z x0,0320
80	56	M42x2	M27x2	G3/4	305	56	145	95	28	4	17,5	180	90	103	167	50	215	32	36	1,5	72	37,75 + Z x0,0350
100	63	M48x2	M33x2	G1	340	63	170	120	32	5	22	212	110	110	185	60	260	36	43	1,5	74	58,25+ Z x 0,0500
100	70	M48x2	M33x2	G1	340	63	170	120	32	5	22	212	110	110	185	65	260	36	43	1,5	74	58,22 + Z x0,0572
125	80	M64x3	M33x2	G1	396	85	206	150	36	5	22	250	132	131	209	70	300	40	43	1,5	100	98,60 + Z x0,0816
125	90	M64x3	M33x2	G1	396	85	206	150	36	5	22	250	132	131	209	80	300	40	43	1,5	100	98,85 + Z x0,0925
140	90	M72x3	M42x2	G11/4	430	90	231	170	36	5	26	285	145	131	234	80	340	40	49	2	110	129,82 + Z x0,1000
140	100	M72x3	M42x2	G11/4	430	90	231	170	36	5	26	285	145	131	234	90	340	40	49	2	110	162,20 + Z x0,1190
160	100	M80x3	M42x2	G11/4	467	95	265	190	40	5	26	315	160	140	250	90	370	45	49	2	135	191,40 + Z x0,1270
160	110	M80x3	M42x2	G11/4	467	95	265	190	40	5	26	315	160	140	250	100	370	45	49	2	135	192,10 + Z x0,1390
180	110	M90x3	M42x2	G11/4	505	106	292	210	45	5	33	355	185	155	257	*	425	50	49	2	150	255,20 + Z x0,1460
180	125	M90x3	M42x2	G11/4	505	106	292	210	45	5	33	355	185	155	257	*	425	50	49	2	150	255,90 + Z x0,1680
200	125	M100x3	M42x2	G11/4	550	112	306	245	45	5	33	385	200	161	294	*	455	56	49	2	180	317,50 + Z x0,1830
200	140	M100x3	M42x2	G11/4	550	112	306	245	45	5	33	385	200	161	294	*	455	56	49	2	180	315,20 + Z x0,2170
250	160	M125x4	M60x2	G11/2	652	125	400	300	50	8	39	475	250	198	347	*	545	63	70	2,5	195	616,60 + Z x0,3260
250	180	M125x4	M60x2	G11/2	652	125	400	300	50	8	39	475	250	198	347	*	545	63	70	2,5	195	662,70 + Z x0,3680
320	200	M160x4	M60x2	G11/2	764	160	490	395	56	8	45	600	320	226	414	*	680	80	70	2,5	275	1122,00 + Z x0,5100
320	220	M160x4	M60x2	G11/2	764	160	490	395	56	8	45	600	320	226	414	*	680	80	70	2,5	275	1125,00 + Z x0,5600

* Piston rod with openings for hook spanner.

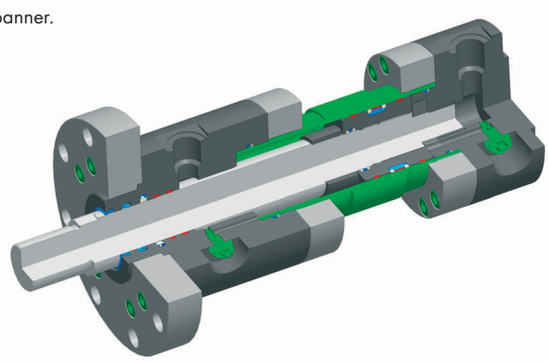

Weights specified are informative, ± 5%, specified in KGs
Custom piston rod stroke, for larger strokes check for ultimate resistance required.
Strokes lower than minimum are supplied with cylinder external fitting with minimum stroke (internal stroke limitation)

MF4 - with flange

for P_{max} 25 MPa

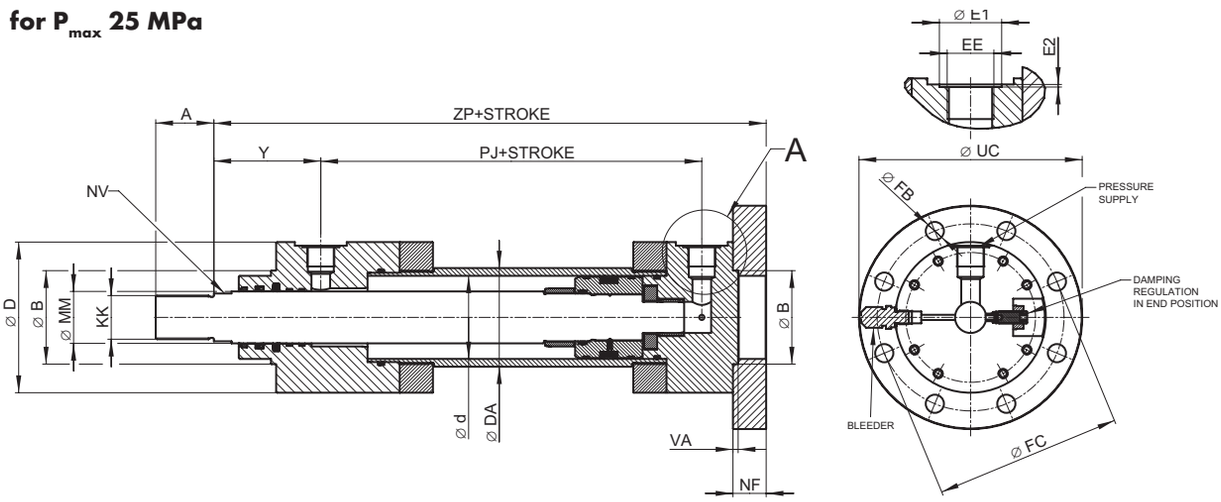

MF4

Ød	Ø MM	KK 6g	EE_M (Metric)	EE_G (Pipe)	ZP	A	ØD	ØDA	VA	NF js13	FB H13	FC js13	ØB H8/f8	Y	NV	UC	PJ	ØE1	E2	STROKE min.	Stroke weight Z (kg)
50	32	M27x2	M22x1,5	G1/2	265	36	102	60	4	25	13,5	132	63	90	30	160	130	29	1	60	14,75 + Z x0,0145
50	36	M27x2	M22x1,5	G1/2	265	36	102	60	4	25	13,5	132	63	90	32	160	130	29	1	60	14,78 + Z x0,0161
63	40	M33x2	M27x2	G3/4	298	45	120	78	4	28	13,5	150	75	99	36	180	141	36	1,5	72	23,10 + Z x0,0230
63	45	M33x2	M27x2	G3/4	298	45	120	78	4	28	13,5	150	75	99	41	180	141	36	1,5	72	23,23 + Z x0,0255
80	50	M42x2	M27x2	G3/4	332	56	145	95	5	32	17,5	180	90	103	46	215	167	36	1,5	72	37,60 + Z x0,0320
80	56	M42x2	M27x2	G3/4	332	56	145	95	5	32	17,5	180	90	103	50	215	167	36	1,5	72	37,75 + Z x0,0350
100	63	M48x2	M33x2	G1	371	63	170	120	5	36	22	212	110	110	60	260	185	43	1,5	74	58,25 + Z x0,0500
100	70	M48x2	M33x2	G1	371	63	170	120	5	36	22	212	110	110	65	260	185	43	1,5	74	58,22 + Z x0,0572
125	80	M64x3	M33x2	G1	430	85	206	150	6	40	22	250	132	131	70	300	209	43	1,5	100	98,60 + Z x0,0816
125	90	M64x3	M33x2	G1	430	85	206	150	6	40	22	250	132	131	80	300	209	43	1,5	100	98,85 + Z x0,0925
140	90	M72x3	M42x2	G11/4	465	90	231	170	6	40	26	285	145	131	80	340	234	49	2	110	129,82 + Z x0,1000
140	100	M72x3	M42x2	G11/4	465	90	231	170	6	40	26	285	145	131	90	340	234	49	2	110	162,20 + Z x0,1190
160	100	M80x3	M42x2	G11/4	505	95	265	190	7	45	26	315	160	140	90	370	250	49	2	135	191,40 + Z x0,1270
160	110	M80x3	M42x2	G11/4	505	95	265	190	7	45	26	315	160	140	100	370	250	49	2	135	192,10 + Z x0,1390
180	110	M90x3	M42x2	G11/4	550	106	292	210	8	50	33	355	185	155	*	425	257	49	2	150	255,20 + Z x0,1460
180	125	M90x3	M42x2	G11/4	550	106	292	210	8	50	33	355	185	155	*	425	257	49	2	150	255,90 + Z x0,1680
200	125	M100x3	M42x2	G11/4	596	112	306	245	10	56	33	385	200	161	*	455	294	49	2	180	317,50 + Z x0,1830
200	140	M100x3	M42x2	G11/4	596	112	306	245	10	56	33	385	200	161	*	455	294	49	2	180	315,20 + Z x0,2170
250	160	M125x4	M60x2	G11/2	703	125	400	300	12	63	39	475	250	198	*	545	347	70	2,5	195	616,60 + Z x0,3260
250	180	M125x4	M60x2	G11/2	703	125	400	300	12	63	39	475	250	198	*	545	347	70	2,5	195	662,70 + Z x0,3680
320	200	M160x4	M60x2	G11/2	830	160	490	395	14	80	45	600	320	226	*	680	414	70	2,5	275	1122,00 + Z x0,5100
320	220	M160x4	M60x2	G11/2	830	160	490	395	14	80	45	600	320	226	*	680	414	70	2,5	275	1125,00 + Z x0,5600

* Piston rod with openings for hook spanner.

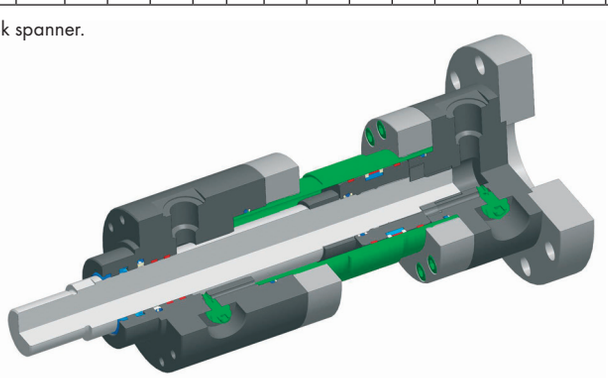

Weights specified are informative, ± 5%, specified in KGs
Custom piston rod stroke, for larger strokes check for ultimate resistance required.
Strokes lower than minimum are supplied with cylinder external fitting with minimum stroke (internal stroke limitation)

MT4 - swivel pivot mounting

for P_{max} 25 MPa

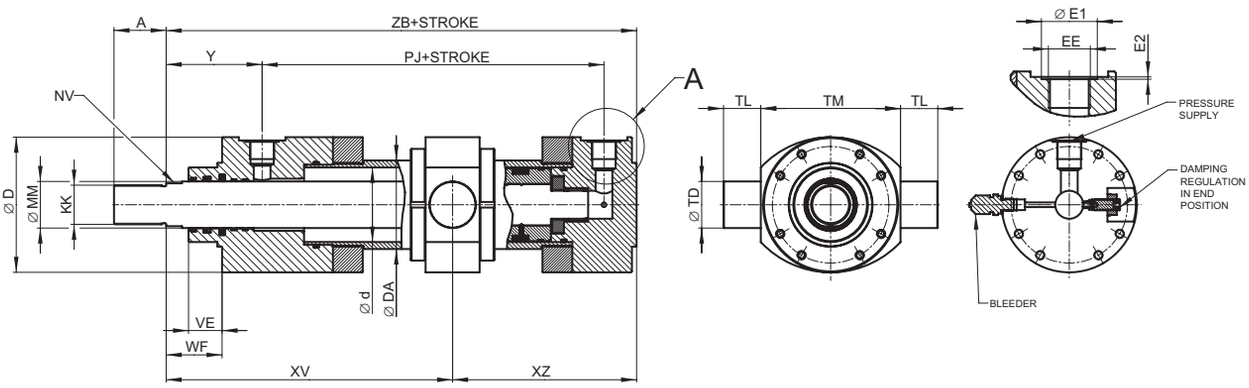

Ød	Ø MM	KK 6g	EE_M (Metric)	EE_G (Pipe)	ZB	A	Y	PJ	WF	VE	NV	ØD	Ø DA	XV min	XZ min	Ø $TD_{(f8)}$	$TL_{(J16)}$	$TM_{(h12)}$	ØE1	E2	STROKE min.	Stroke weight Z (kg)
50	32	M27x2	M22x1,5	G1/2	244	36	90	130	47	29	30	102	62	224	156	32	25	112	29	1	136	15,16 + Z x0,0145
50	36	M27x2	M22x1,5	G1/2	244	36	90	130	47	29	32	102	62	224	156	32	25	112	29	1	136	15,19 + Z x0,0161
63	40	M33x2	M27x2	G3/4	274	45	99	141	53	32	36	120	78	216	191	40	32	125	36	1,5	158	23,94 + Z x0,0230
63	45	M33x2	M27x2	G3/4	274	45	99	141	53	32	41	120	78	216	191	40	32	125	36	1,5	158	24,07 + Z x0,0255
80	50	M42x2	M27x2	G3/4	305	56	103	167	60	36	46	145	95	258	210	50	40	150	36	1,5	166	39,20 + Z x0,0320
80	56	M42x2	M27x2	G3/4	305	56	103	167	60	36	50	145	95	258	210	50	40	150	36	1,5	166	39,30 + Z x0,0350
100	63	M48x2	M33x2	G1	340	63	110	185	68	41	60	170	120	270	258	63	50	180	43	1,5	188	63,13 + Z x0,0500
100	70	M48x2	M33x2	G1	340	63	110	185	68	41	65	170	120	270	258	63	50	180	43	1,5	188	63,10 + Z x0,0572
125	80	M64x3	M33x2	G1	396	85	131	209	76	45	70	206	150	320	310	80	63	224	43	1,5	234	109,75 + Z x0,0816
125	90	M64x3	M33x2	G1	396	85	131	209	76	45	80	206	150	320	310	80	63	224	43	1,5	234	110,00 + Z x0,0925
140	90	M72x3	M42x2	G11/4	430	90	131	234	76	48	80	231	170	346	354	90	70	265	49	2	264	154,53 + Z x0,1000
140	100	M72x3	M42x2	G11/4	430	90	131	234	76	48	90	231	170	346	354	90	70	265	49	2	264	160,00 + Z x0,1190
160	100	M80x3	M42x2	G11/4	467	95	140	250	85	50	90	265	190	366	400	100	80	280	49	2	299	216,20 + Z x0,1270
160	110	M80x3	M42x2	G11/4	467	95	140	250	85	50	100	265	190	366	400	100	80	280	49	2	299	216,90 + Z x0,1390
180	110	M90x3	M42x2	G11/4	505	106	155	257	95	55	*	292	210	391	438	110	90	320	49	2	324	291,00 + Z x0,1460
180	125	M90x3	M42x2	G11/4	505	106	155	257	95	55	*	292	210	391	438	110	90	320	49	2	324	291,70 + Z x0,1680
200	125	M100x3	M42x2	G11/4	550	112	161	294	101	61	*	306	245	450	494	125	100	335	49	2	394	355,30 + Z x0,1830
200	140	M100x3	M42x2	G11/4	550	112	161	294	101	61	*	306	245	450	494	125	100	335	49	2	394	353,00 + Z x0,2170
250	160	M125x4	M60x2	G11/2	652	125	198	347	113	71	*	400	300	526	565	160	125	425	70	2,5	439	727,00 + Z x0,3260
250	180	M125x4	M60x2	G11/2	652	125	198	347	113	71	*	400	300	526	565	160	125	425	70	2,5	439	728,40 + Z x0,3680
320	200	M160x4	M60x2	G11/2	764	160	226	414	136	88	*	490	395	604	673	200	160	530	70	2,5	513	1259,00 + Z x0,5100
320	220	M160x4	M60x2	G11/2	764	160	226	414	136	88	*	490	395	604	673	200	160	530	70	2,5	513	1268,00 + Z x0,5600

* Piston rod with openings for hook spanner.

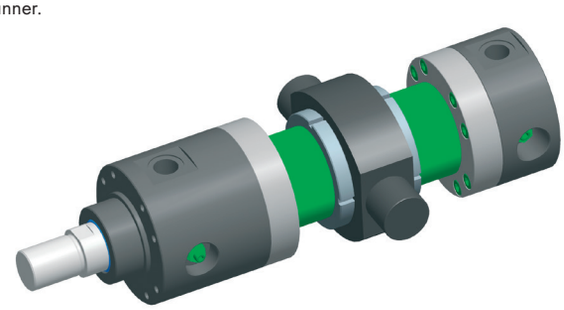

Weights specified are informative, ± 5%, specified in KGs
Custom piston rod stroke, for larger strokes check for ultimate resistance required.
Strokes lower than minimum are supplied with cylinder external fitting with minimum stroke (internal stroke limitation)

MS2 - foot mounting

for P_{max} 25 MPa

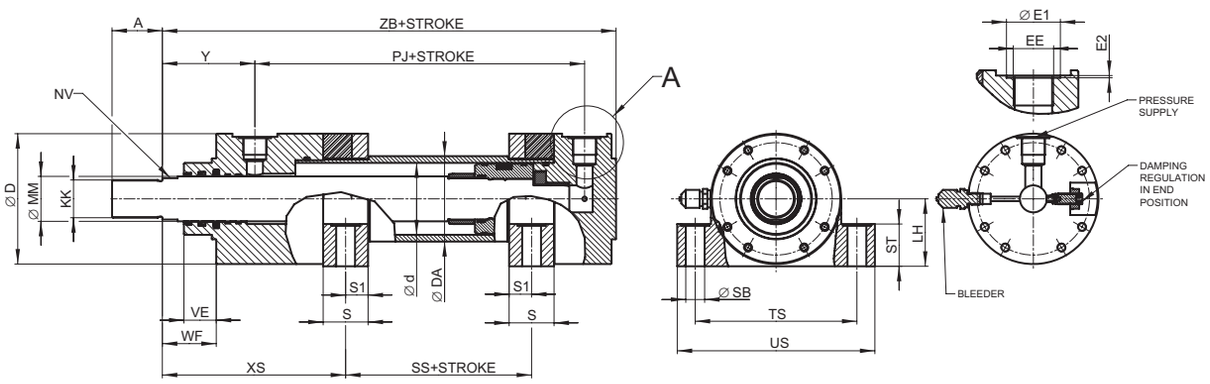

Ød	Ø MM	KK 6g	EE_M (Metric)	EE_G (Pipe)	ZB	A	Y	PJ	WF	VE	NV	ØD	Ø DA	Ø SB	TS	US	ST	LH	S1	S	SS_{min}	XS	Ø E1	E2	STRO-KE min.	Stroke weight Z (kg)
50	32	M27x2	M22x1,5	G1/2	244	36	90	130	47	29	30	102	62	11	130	155	37	55	17,5	35	72,5	176	29	1	75,5	17,58 + Z x 0,0145
50	36	M27x2	M22x1,5	G1/2	244	36	90	130	47	29	32	102	62	11	130	155	37	55	17,5	35	72,5	176	29	1	75,5	17,61 + Z x 0,0161
63	40	M33x2	M27x2	G3/4	274	45	99	141	53	32	36	120	78	13,5	150	180	42	65	20	40	98	189	36	1,5	96	25,60 + Z x 0,023
63	45	M33x2	M27x2	G3/4	274	45	99	141	53	32	41	120	78	13,5	150	180	42	65	20	40	98	189	36	1,5	96	25,73 + Z x 0,0255
80	50	M42x2	M27x2	G3/4	305	56	103	167	60	36	46	145	95	17,5	180	220	47	75	25	50	116	204	36	1,5	109	42,75 + Z x 0,0320
80	56	M42x2	M27x2	G3/4	305	56	103	167	60	36	50	145	95	17,5	180	220	47	75	25	50	116	204	36	1,5	109	42,86 + Z x 0,0350
100	63	M48x2	M33x2	G1	340	63	110	185	68	41	60	170	120	22	210	255	57	90	30	60	131	198	43	1,5	103	62,33 + Z x 0,0500
100	70	M48x2	M33x2	G1	340	63	110	185	68	41	65	170	120	22	210	255	57	90	30	60	131	198	43	1,5	103	62,30 + Z x 0,0572
125	80	M64x3	M33x2	G1	396	85	131	209	76	45	70	206	150	26	255	305	67	105	35	70	166	236	43	1,5	141	110,80 + Z x 0,0816
125	90	M64x3	M33x2	G1	396	85	131	209	76	45	80	206	150	26	255	305	67	105	35	70	166	236	43	1,5	141	111,05 + Z x 0,0925
140	90	M72x3	M42x2	G11/4	430	90	131	234	76	48	80	231	170	30	290	350	72	115	42,5	85	191	253,5	49	2	171	151,12 + Z x 0,1000
140	100	M72x3	M42x2	G11/4	430	90	131	234	76	48	90	231	170	30	290	350	72	115	42,5	85	191	253,5	49	2	171	156,50 + Z x 0,1190
160	100	M80x3	M42x2	G11/4	467	95	140	250	85	50	90	265	190	33	330	400	77	135	52,5	105	226	273,5	49	2	226	234,70 + Z x 0,1270
160	110	M80x3	M42x2	G11/4	467	95	140	250	85	50	100	265	190	33	330	400	77	135	52,5	105	226	273,5	49	2	226	235,40 + Z x 0,1390
180	110	M90x3	M42x2	G11/4	505	106	155	257	95	55	*	292	210	40	360	440	92	150	57,5	115	251	248,5	49	2	251	307,40 + Z x 0,1460
180	125	M90x3	M42x2	G11/4	505	106	155	257	95	55	*	292	210	40	360	440	92	150	57,5	115	251	248,5	49	2	251	308,10 + Z x 0,1680
200	125	M100x3	M42x2	G11/4	550	112	161	294	101	61	*	306	245	40	385	465	97	160	62,5	125	275	323,5	49	2	281	372,20 + Z x 0,1830
200	140	M100x3	M42x2	G11/4	550	112	161	294	101	61	*	306	245	40	385	465	97	160	62,5	125	275	323,5	49	2	281	371,70 + Z x 0,2170
250	160	M125x4	M60x2	G11/2	652	125	198	347	113	71	*	400	300	50	500	620	120	220	75	150	320	387	70	2,5	326	774,90 + Z x 0,3260
250	180	M125x4	M60x2	G11/2	652	125	198	347	113	71	*	400	300	50	500	620	120	220	75	150	320	387	70	2,5	326	776,30 + Z x 0,3680
320	200	M160x4	M60x2	G11/2	764	160	226	414	136	88	*	490	395	56	600	730	160	260	90	180	389	456	70	2,5	415	1351,00 + Z x 0,5100
320	220	M160x4	M60x2	G11/2	764	160	226	414	136	88	*	490	395	56	600	730	160	260	90	180	389	456	70	2,5	415	1354,00 + Z x 0,5600

* Piston rod with openings for hook spanner.

*for particular dimension **SS+Stroke = Z+SS_{min} - $Stroke_{min}$**

Example:
For nominal Ø**d** = 50 mm and stroke **Z** = 500 mm
SS+Stroke= 500 + 72,5 - 75,5 = 497 mm

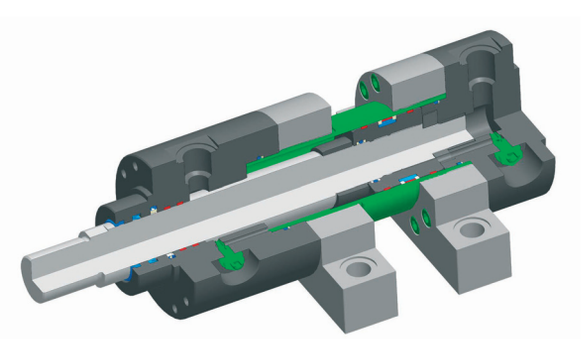

Weights specified are informative, ± 5%, specified in KGs
Custom piston rod stroke, for larger strokes check for ultimate resistance required.
Strokes lower than minimum are supplied with cylinder external fitting with minimum stroke (internal stroke limitation)

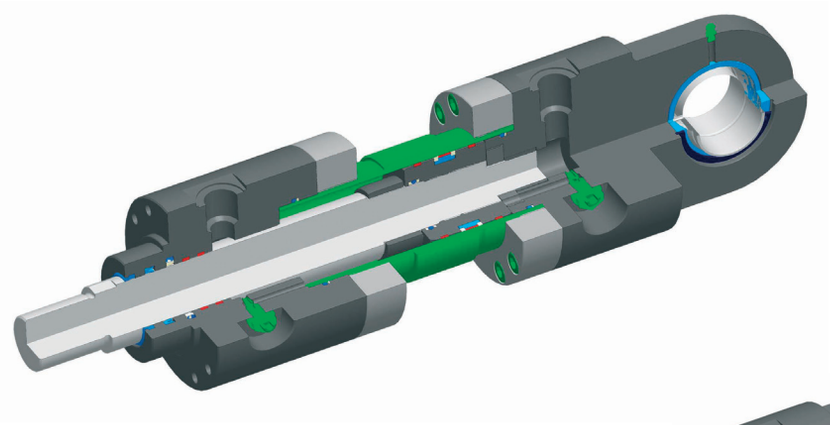

FIXED LOOP - friction bearing (MP3)

FIXED LOOP - spherical bearing (MP5)

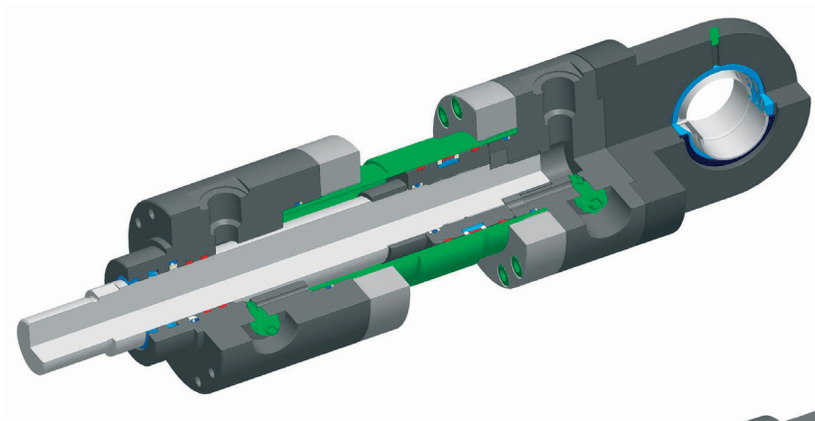

CYLINDER LOOP - adjustable (MP6)
possibility to rotate the loop in respect to the inlet screw-coupling position

MP3, MP5, MP6 - cylinder fixed loop

for P_{max} 25 MPa

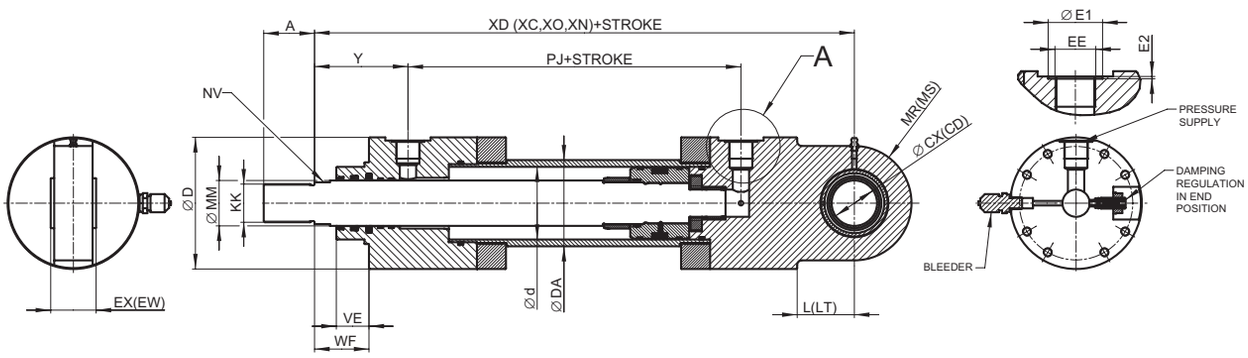

MP5, MP6

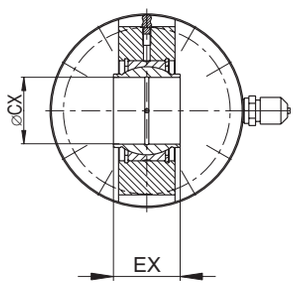

MP3

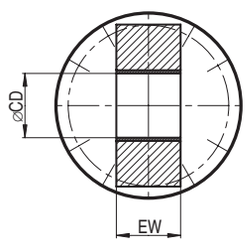

Ød	Ø MM	KK 6g	EE_M (Metric)	EE_G (Pipe)	XD (XC, XO, XN)	A	Y	PJ	WF	VE	NV	ØD	Ø DA	L(LT)	MR (MS)	EW (EX) h12	CX (CD) H9	ØE1	E2	STROKE min.	Stroke weight Z (kg)
50	32	M27x2	M22x1,5	G1/2	305	36	90	130	47	29	30	102	62	40	40	32	32	29	1	60	13,98 + Z x 0,0145
50	36	M27x2	M22x1,5	G1/2	305	36	90	130	47	29	32	102	62	40	40	32	32	29	1	60	14,01 + Z x 0,0161
63	40	M33x2	M27x2	G3/4	348	45	99	141	53	32	36	120	78	50	50	40	40	36	1,5	72	22,80 + Z x 0,023
63	45	M33x2	M27x2	G3/4	348	45	99	141	53	32	41	120	78	50	50	40	40	36	1,5	72	22,93 + Z x 0,0255
80	50	M42x2	M27x2	G3/4	395	56	103	167	60	36	46	145	95	63	63	50	50	36	1,5	72	37,80 + Z x 0,0320
80	56	M42x2	M27x2	G3/4	395	56	103	167	60	36	50	145	95	63	63	50	50	36	1,5	72	37,92 + Z x 0,0350
100	63	M48x2	M33x2	G1	442	63	110	185	68	41	60	170	120	71	71	63	63	43	1,5	74	57,45 + Z x 0,0500
100	70	M48x2	M33x2	G1	442	63	110	185	68	41	65	170	120	71	71	63	63	43	1,5	74	57,42 + Z x 0,0572
125	80	M64x3	M33x2	G1	520	85	131	209	76	45	70	206	150	90	90	80	80	43	1,5	100	100,60 + Z x 0,0816
125	90	M64x3	M33x2	G1	520	85	131	209	76	45	80	206	150	90	90	80	80	43	1,5	100	100,85 + Z x 0,0925
140	90	M72x3	M42x2	G11/4	580	90	131	234	76	48	80	231	170	113	105	90	90	49	2	110	135,02 + Z x 0,1000
140	100	M72x3	M42x2	G11/4	580	90	131	234	76	48	90	231	170	113	105	90	90	49	2	110	140,40 + Z x 0,1190
160	100	M80x3	M42x2	G11/4	617	95	140	250	85	50	90	265	190	112	112	100	100	49	2	135	196,10 + Z x 0,1270
160	110	M80x3	M42x2	G11/4	617	95	140	250	85	50	100	265	190	112	112	100	100	49	2	135	196,80 + Z x 0,1390
180	110	M90x3	M42x2	G11/4	690	106	155	257	95	55	*	292	210	135	135	110	110	49	2	150	264,00 + Z x 0,1460
180	125	M90x3	M42x2	G11/4	690	106	155	257	95	55	*	292	210	135	135	110	110	49	2	150	264,70 + Z x 0,1680
200	125	M100x3	M42x2	G11/4	756	112	161	294	101	61	*	306	245	160	145	125	125	49	2	180	329,50 + Z x 0,1830
200	140	M100x3	M42x2	G11/4	756	112	161	294	101	61	*	306	245	160	145	125	125	49	2	180	327,20 + Z x 0,2170
250	160	M125x4	M60x2	G11/2	903	125	198	347	113	71	*	400	300	200	190	160	160	70	2,5	195	661,30 + Z x 0,3260
250	180	M125x4	M60x2	G11/2	903	125	198	347	113	71	*	400	300	200	190	160	160	70	2,5	195	662,70 + Z x 0,3680
320	200	M160x4	M60x2	G11/2	1080	160	226	414	136	88	*	490	395	250	230	200	200	70	2,5	275	1195,00 + Z x 0,5100
320	220	M160x4	M60x2	G11/2	1080	160	226	414	136	88	*	490	395	250	250	200	200	70	2,5	275	1198,00 + Z x 0,5600

* Piston rod with openings for hook spanner.

Weights specified are informative, ± 5%, specified in KGs
Custom piston rod stroke, for larger strokes check for ultimate resistance required.
Strokes lower than minimum are supplied with cylinder external fitting with minimum stroke (internal stroke limitation)

Cylinder loop with standard hinge bearing HYDRAULICS

EYES ISO 6022

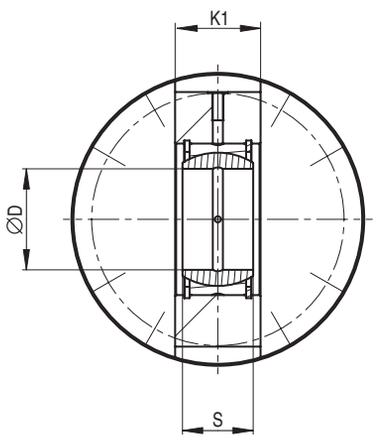

MP6H

MP5H

Piston rod loop hydraulics standard

Ød	ØD	K1	S	LOOP SPECIFICATION
50	35	28	25	GE35ES
63	40	33	28	GE40ES
80	50	40	35	GE50ES
100	60	50	44	GE60ES
125	80	67	55	GE80ES
140	90	72	60	GE90ES
160	100	85	70	GE100ES
180	110	88	70	GE110ES
200	120	103	85	GE120ES
250	160	130	105	GE160ES
320	200	162	130	GE200ES

EYES ISO 6022

Piston rod loops

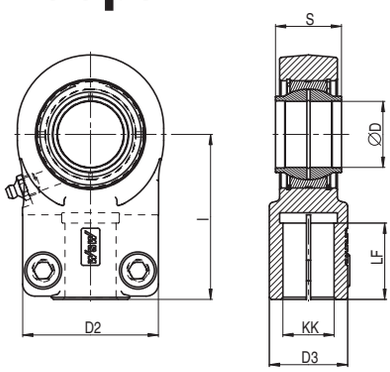

Piston rod loop according to ISO 6982

Ød	KK	CX	EX	I	LF	D2	D3	LOOP SPECIFICATION	HINGE SPECIFICATION
50	M27x2	32	32	80	37	66	38	WAPR32CE	GEEW32ES
63	M33x2	40	40	97	46	80	47	WAPR40CE	GEEW40ES
80	M42x2	50	50	120	57	96	58	WAPR50CE	GEEW50ES
100	M48x2	63	63	140	64	114	70	WAPR63CE	GEEW63ES
125	M64x3	80	80	180	86	148	90	WAPR80CE	GEEW80ES
140	M72x3	90	90	195	91	160	100	WAPR90CE	GEEW90ES
160	M80x3	100	100	210	96	178	110	WAPR100CE	GEEW100ES
180	M90x3	110	110	235	106	190	125	WAPR110CE	GEEW110ES
200	M100x3	125	125	260	113	200	135	WAPR125CE	GEEW125ES
250	M125x4	160	160	310	126	250	165	WAPR160CE	GEEW160ES
320	M160x4	200	200	390	161	320	215	WAPR200CE	GEEW200ES

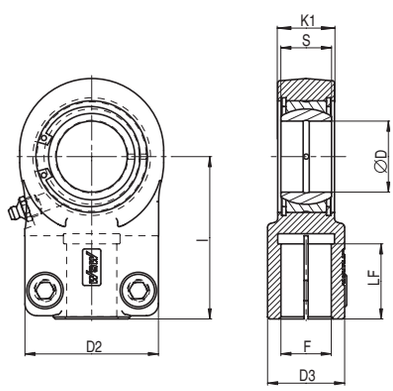

Piston rod loop with standard hinge bearing HYDRAULICS

Ød	F	ØD	K1	S	I	LF	D2	D3	LOOP SPECIFICATION	HINGE SPECIFICATION
50	M27x2	35	28	25	80	37	66	38	WAPR32CE	GE35ES
63	M33x2	40	33	32	97	46	80	47	WAPR40CE	GE40ES
80	M42x2	50	40	35	120	57	96	58	WAPR50CE	GE50ES
100	M58x1.5	60	50	44	130	59	120	75	WAPR60U	GE60ES
125	M64x3	80	67	55	180	86	148	90	WAPR80CE	GE80ES
140	M72x3	90	72	60	195	91	160	100	WAPR90CE	GE90ES
160	M80x3	100	85	70	210	96	178	110	WAPR100CE	GE100ES
180	M90x3	110	88	70	235	106	190	125	WAPR110CE	GE110ES
200	M100x3	120	103	85	260	113	200	135	WAPR125CE	GE120ES
250	M125x4	160	130	105	310	126	250	165	WAPR160CE	GE160ES
320	M160x4	200	162	130	390	161	320	215	WAPR200CE	GE200ES

Company HydrauliCS Ltd. doesn´t provide whole serie of telescopic cylinders, besause this type of cylinders are designed and produced fully according customer specifications.

One-acting telescopic cylinder

- Number of maximum stages isn´t limited, but ussually is it 2 – 4 stages.
- Maximum diameter of the biggest stage is limited to 450 mm and 1 meter lenght.
- Whole lift is limited by ultimate strenght
- Backwards motion must be done by external force, which must overcome internal resistance of telescopic cylinder and resistance of hydraulic medium

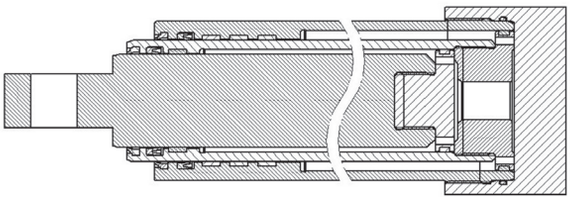

Single-acting telescopic hydraulic motor with constant speed of extension

- Number of stages is limited to a maximum of 2 or 3
- Specific dimensions must be closely consulted with our design department
- Backward mostion must be provided by an external force, which must overcome internal resistance and resistance of hydraulic medium
- Usually used in the lift industry and balancing loads

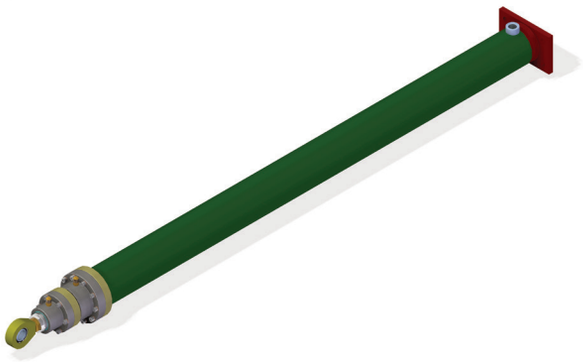

Double-acting telescopic hydraulic motor

- Number of individual steps is not limited, but usually is it 2 – 4 stages
- Specific dimensions must be closely consulted with our design department
- For the proposal itself is very important value of the real speed of the individual stages, the value of the real load and real media pressure

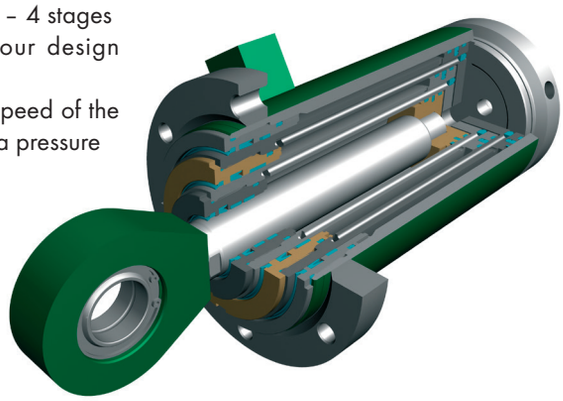

Swivel hydraulic cylinder

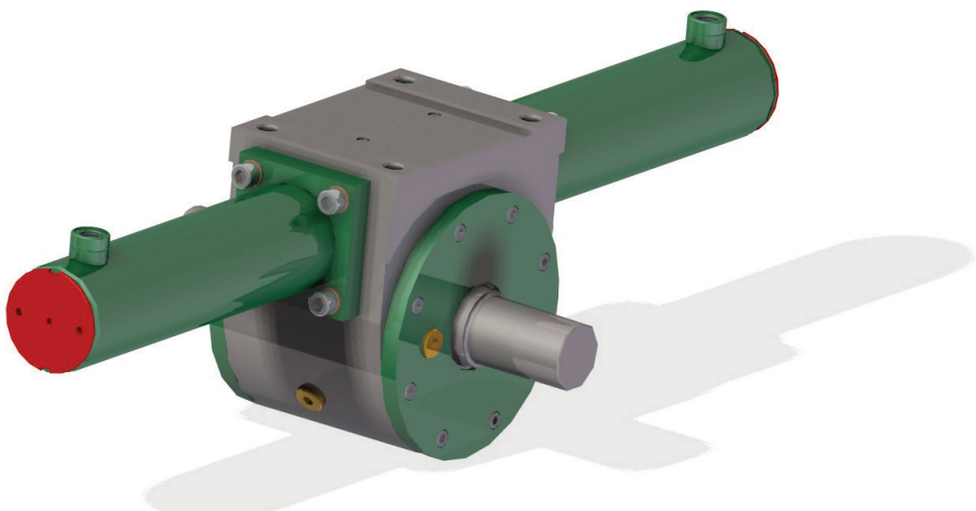

Custom production according customer

Parameters needed for construction:
- Torque Mk [Nm]
- Working pressure Pp [MPa]
- Swivel angle [°]
- The main installation dimensions

Specifics and design capabilities
- High Torque
- Adjustable cushioning
- Maintenance free
- Fast movements
- Low friction
- Constant torque in whole range
- Electronic position sensing
- Single-acting version with spring
- Drive with hydraulics and management

Linear hydraulic motor with mechanical lock

Solutions for applications, where is "flexibility" of the hydraulic system inconvenient. Locking is provided by mechanical solution.

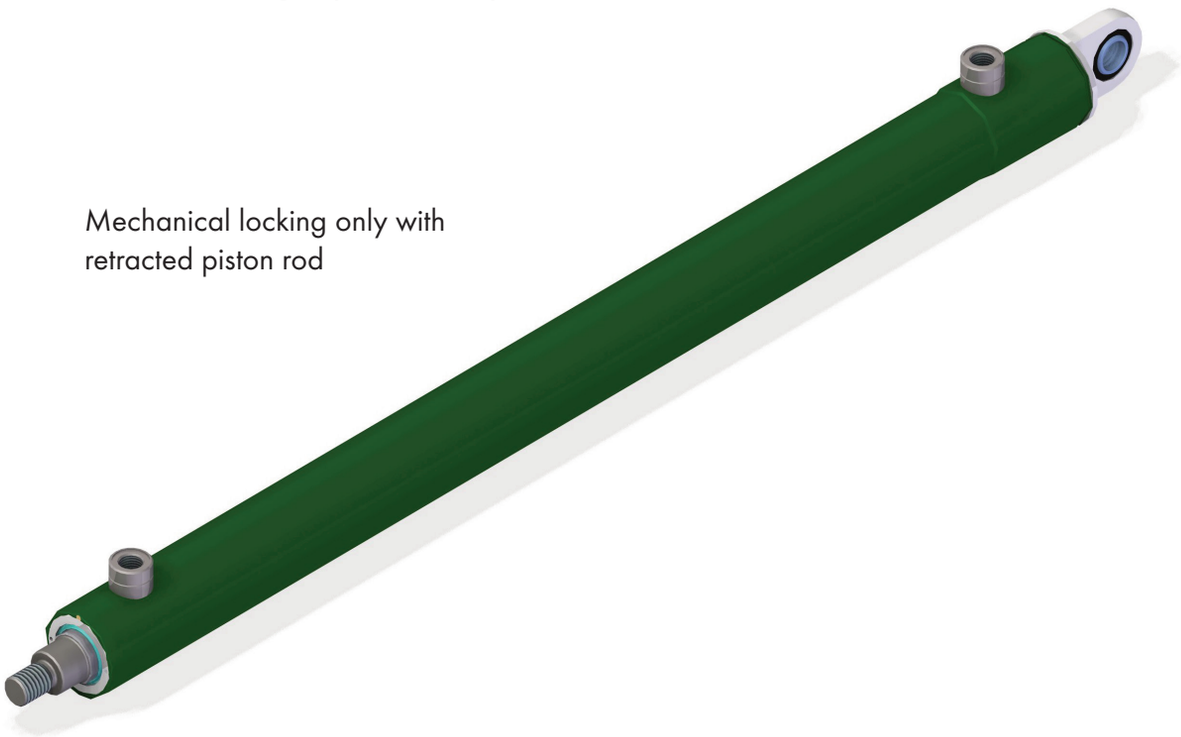

Mechanical locking only with retracted piston rod

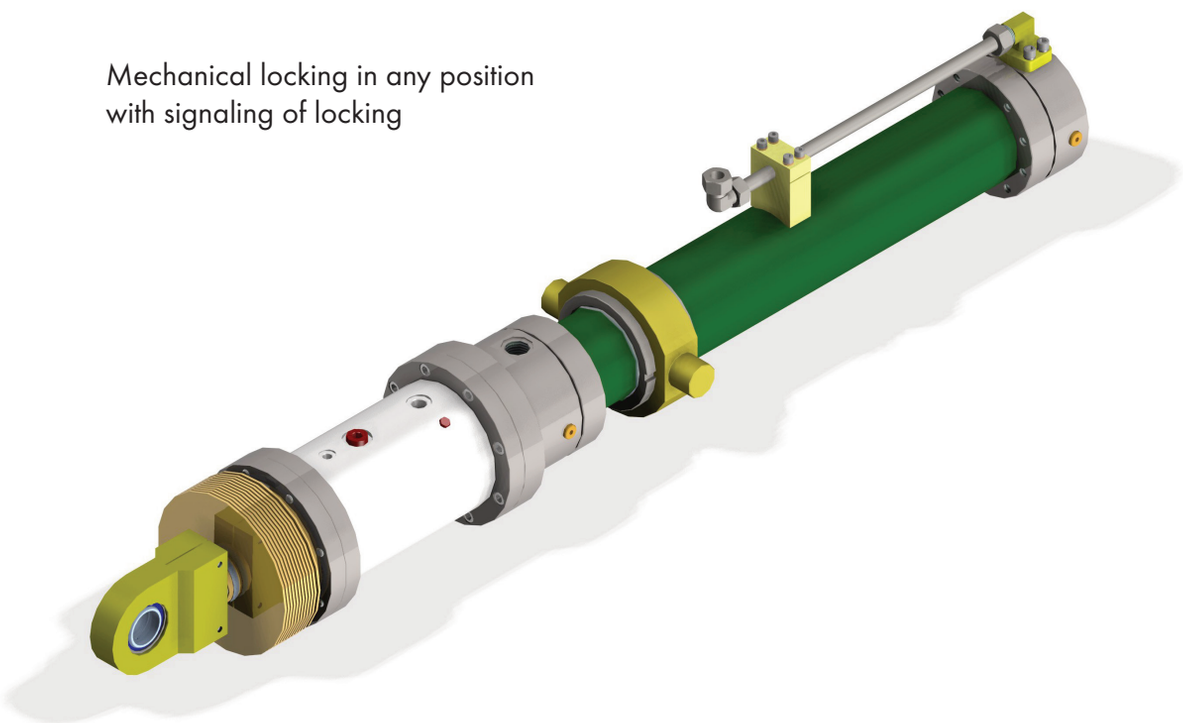

Mechanical locking in any position with signaling of locking

- Always is necessarry to define maximum force needed for locking

Custom-made hydraulic motors

If no hydraulic motor specified on previous pages meets your requirements, our further production possibilities are specified bellow.
All previous information contained in the catalog - type EH, ZH1, ... ISO 6022 with dimensions specified provides namely quick reference for types and dimensions. The objective is to facilitate specifying the hydraulic engine, namely the technical solution. The advantage of catalog cylinders is namely its quick delivery / we stock hundreds of parts for assembly of standardized cylinders/ and its favorable price.
Any deviations from the type standard means a non-standard design of the LHM, thus complicating the production significantly. For production of the so-called custom-designed hydraulic motor.
In such case, it is necessary to deliver a simple drawing or verbal description, specifying important assembly and fitting dimensions.
If you want to be absolutely sure that we manufacture precisely what you described, please, in your order, specify „necessary to supply external mounting to be agreed". (Delivery terms will be prolonged slightly).
CUSTOMER SHEET will assist when supplying the technical assignment, describing the actual functionality (applicable both for standardized and custom hydraulic engines)

Recommendation
- it is recommended to utilize developed modules of individual types (EH, ZH1,... ISO 6022)
- dimension only such dimensions, which are to be complied with unconditionally
- dimensions, which may not be larger or smaller than a specific value are to be specified as, for example,. „max. 20" or „min. 100"

During our existence, we have designed many various variants, types and dimensions of linear hydraulic motors. We are prepared and able to provide custom-made variants. We fulfill wishes and requirements of customers as to stay at the top and continuously develop and innovate our products.
In general, varieties of parameters of custom designs can be specified as follows:

DIMENSIONS

Hydraulic motor minimum dimensions: - cylinder nominal diameter 20 mm, stroke is limited by brace rod strength and dimensions of tube blanks, up to approx. 2.000 mm.

Hydraulic motor maximum dimensions: - cylinder internal diameter up to 500 mm, stroke limited due to production possibilities and weight, up to 1,000 mm

In general, in terms of machinery and dimensions of semi-products for production of hydraulic engines - namely tube and piston rod - we are limited by the max. length 7,000 mm and maximum possible rotational machining of 700 mm and weight of up to 1,200 kg.

OPERATING CONDITIONS

Increased temperature resistance – depending of the seals used, further segmentation can be determined by operating temperature up to – 40 C
120 C
150 C
200 C

Please, consider not only different temperatures, but also adjusting working pressure and working liquids used!

Non-standard operating media
- due to tolerance to other materials - namely sealing elements - it is necessary to compare substance safety sheet and its characteristics according to ISO 15380 K Standard mineral oils are most often replaced with:
- mineral oils with various viscosity
- biodegradable mineral oils
- glycols, HFA, HFB, HFC
- HFDR – heavily flammable liquid
- HEES – heavily flammable liquid, biodegradable
- gases
- chemical substances – gasoline, diesel, ...
- water

Working pressure – value of hydraulic motor working pressure in the range of 6 to 30 MPa is considered standard. For hydraulic motors with increased working pressure it is required to consult, in detail, and engineer each design, namely in respect of operation safety and hydraulic motor service life. Despite having produced a hydraulic motor with working pressure of 100 MPa, in majority of cases working pressure requirements do not exceed 40 MPa.

On the other hand, for hydraulic motors with low working pressure - up to 5 MPa - operational conditions and actual functions must be specified, too.

However, it is not a question of safety, rather an issue of warranty of functionalities and reliability.

In regards to non-standard operating conditions, namely non-standard operating liquids or highly aggressive environment, we supply

HYDRAUILIC MOTORS IN STAINLESS STEEL DESIGN

Not each type and dimension of hydraulic motor can be supplied in the stainless steel design.
Due to limited availability of semi products we are not always able to fulfill customer's needs and requirements.

HYDRAULIC MOTORS WITH INCREASED FUNCTIONALITY

LHM with inductive pick-up of end positions
LHM with linear position measurement - supplied with fitted and tested linear pick-up sensor, or prepared for simple fitting of the sensor by the customer.

Assembly set of LHM with hydraulic element
- valve / stalling, retardant, one-way/
- lock
- set of elements with defined functionality

All specified groups of custom production of hydraulic motors require much longer period of time for mutual understanding and agreement on the technical design of the motor, thus longer delivery terms.

TYPES OF HYDRAULIC MOTORS

Each single-piece production LHM is an original and must undergo a complete production preparation process. As specified in the beginning of the Custom-made hydraulic motors chapter, also standard cylinders with modified design are sometimes custom-made products.
Such hydraulic motors are:

Plungers (effective diameters is the piston rod diameter)
- w/o guided piston, w/ guided piton, with end-position damping during plunger travel-in and other various specifications.

Single-action linear hydraulic motors compressive (effective diameter is the piston diameter - circular ring chamber must be bled) and tractor (effective diameter is the circular ring diameter - the massive piston chamber must be bled).
- w/return spring, w/ end-position damping

Twin-action hydraulic engines, one-way, two-way (running piston rod)
- w/ or w/o end-positions damping
- piston rod stroke end-position regulation

Telescopic
- single-action
- twin-action

All groups can be assigned many various designs, whether
- shapes and cylinder mount designs in the machinery unit kinematics
- working liquid supply connection designs and dimensions
- material variations including surface finish
- functionalities and operating conditions, etc.

For purposes of visualization, following pages of this catalog specify actual examples of variants of non-standard designs of hydraulic motors - hydraulic cylinders.

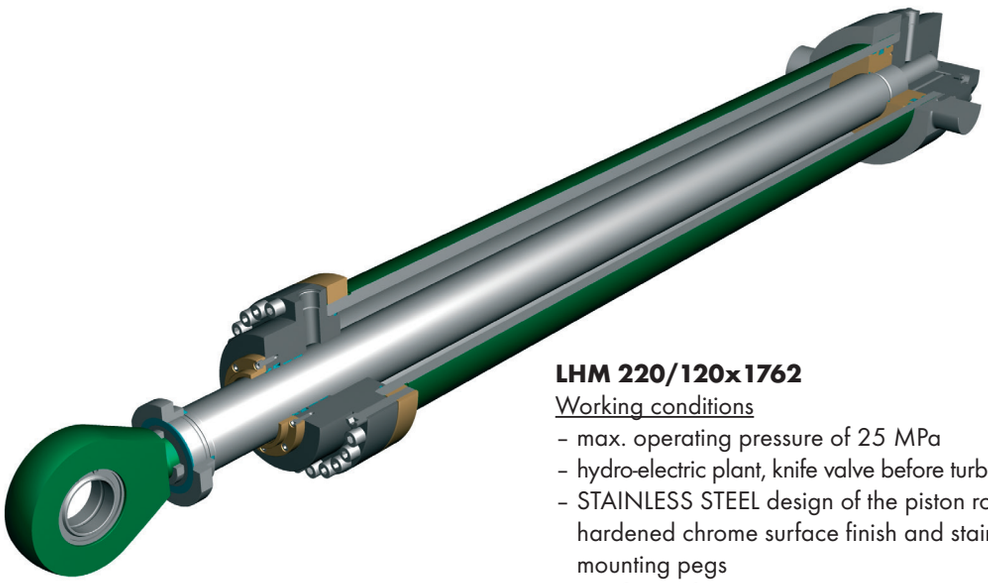

LHM 220/120x1762

Working conditions

- max. operating pressure of 25 MPa
- hydro-electric plant, knife valve before turbine
- STAINLESS STEEL design of the piston rod required, with hardened chrome surface finish and stainless steel welds of mounting pegs

year of manufacture - 2009

LHM 200/140x1500

Working conditions

- max. operating pressure of 32 MPa
- general design - for heavy duty operating conditions heavy industry - hoisting coiled sheets
- linear contactless position sensing
- design enabling small deflection on the flange surface

year of manufacture - 2003

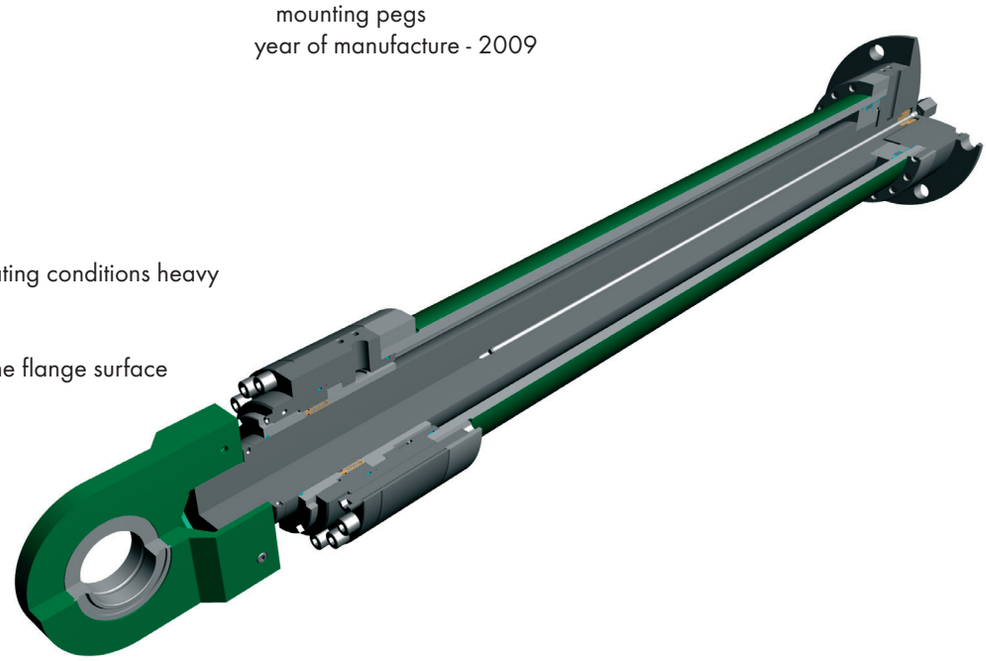

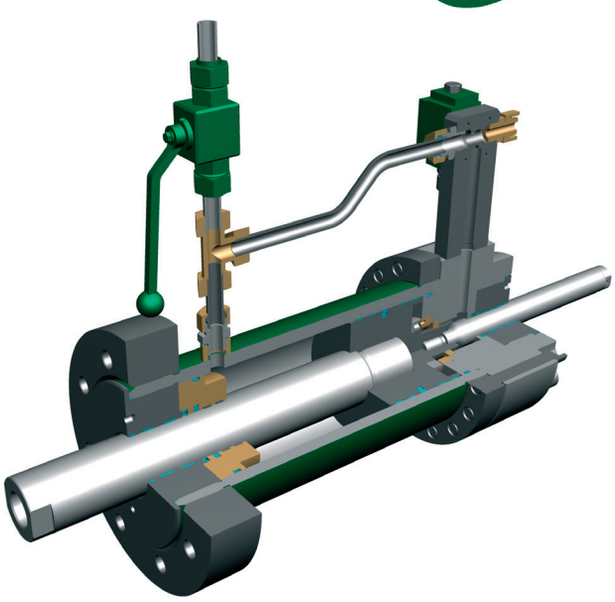

LHM 140/63x160

Working conditions

- max. operating pressure of up to 0.5 MPa
- designed with low friction of the piston rod travel
- max. operating speed - 0.5 m/s, controlled by-passing of oil between chambers with regulated damping of end positions
- hydro-electric plant – backflow valve seal

year of manufacture - 2008

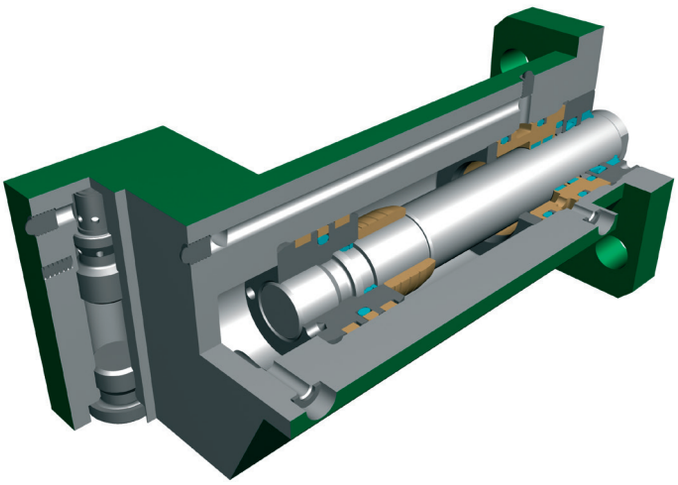

LHM 40/22x58

Operating conditions

- heavy industry
- LHM compact design with fitted hydraulic lock and regulated damping

year of manufacture - 2005

LHM 40/22x70

Working conditions

- max. operating pressure of 20 MPa
- sensing by magnetic inductive sensors - sensor adjustable position
- two hydraulic motors on a single base with regulated damping of end positions
- food-processing industry application, with three-shift operation

year of manufacture - 2008

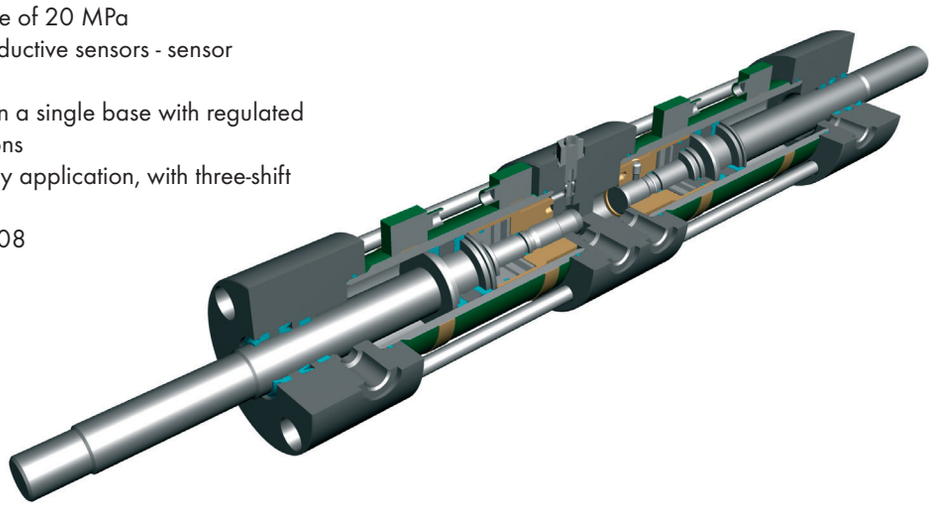

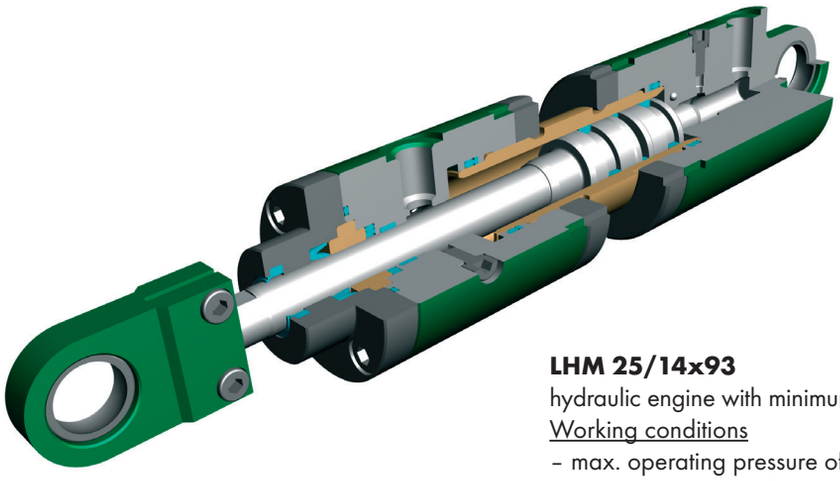

LHM 25/14x93

hydraulic engine with minimum dimensions – our product line

Working conditions

- max. operating pressure of 20 MPa, three-shift operation with high number of machine cycles – work cycle of approx. 1 second

LHM 110/63x570

Working conditions

- max. operating pressure of 20 MPa
- hydro-electric plant, valve before turbine
- STAINLESS STEEL design of the piston rod required, with hardened chrome surface finish stainless steel welds of mounting pegs and stainless steel self-lubricating hinge bearing
- mechanical regulation of stroke and damping of piston rod end positions

year of manufacture - 2006

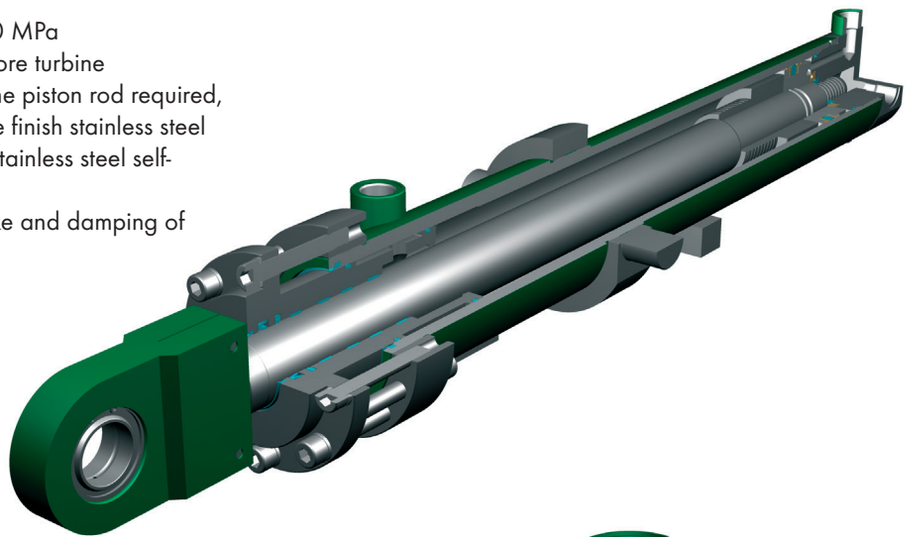

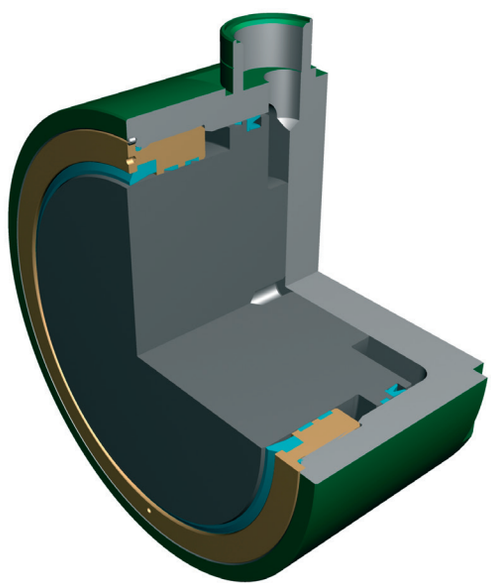

LHM 250/220x18

Application

- testing shop of construction materials and technologies
- pressure point
- max. operating pressure of 20 MPa
- piston rod position hold /very low leakage/ for several hours

year of manufacture – 2007

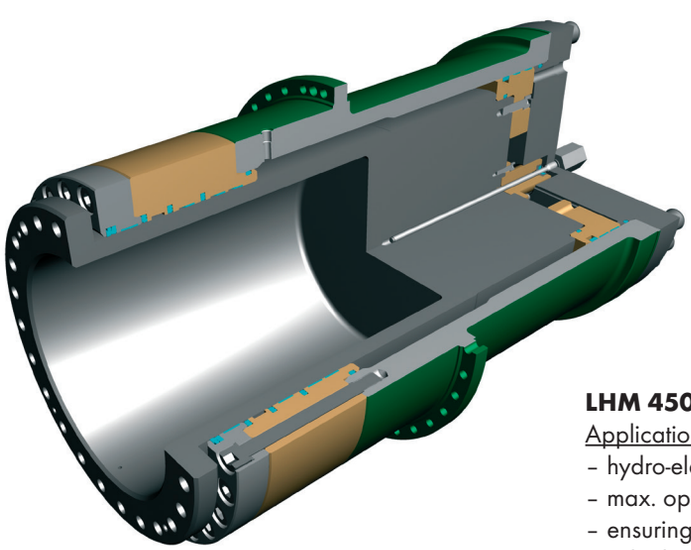

LHM 450/410x235

Application

- hydro-electric plant – needle valve flow regulation
- max. operating pressure of 20 MPa
- ensuring smooth travel in speeds from 0.0005 m/s
- cylinder fitted with linear contacless position sensor

year of manufacture – 2006

Hydraulic cylinder 320/140x860
Hydraulic cylinder for hydroelectric platn again, now in double-rod version

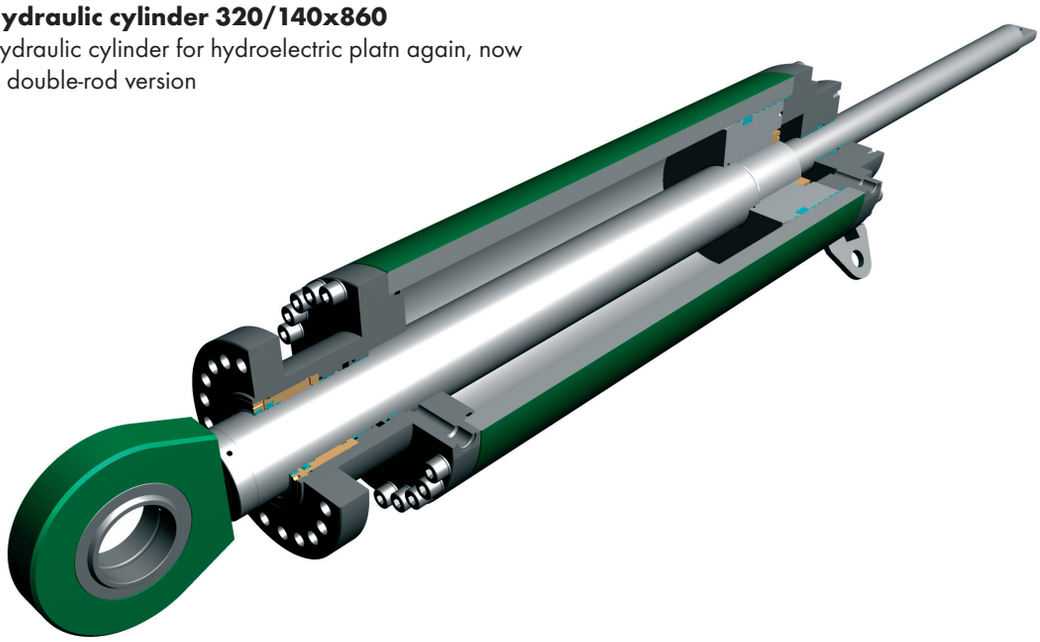

LHM – 320/300x2100
Working conditions
- max. operating pressure18MPa
- telescopic exhaust gas
- heavy industry - blast furnace
  year of manufacture 2010

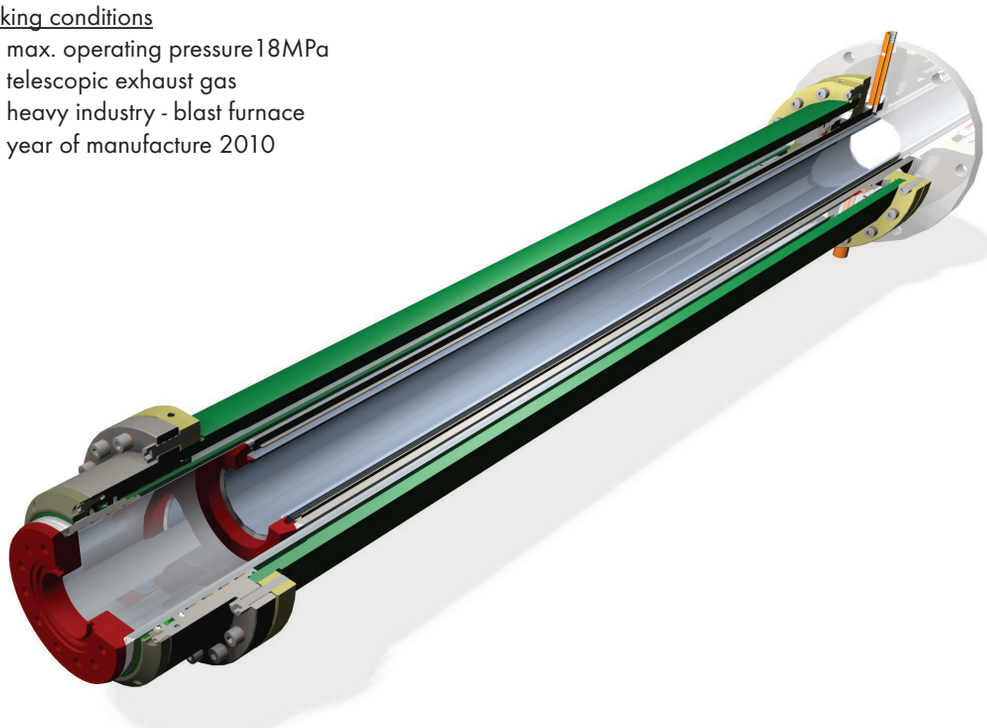

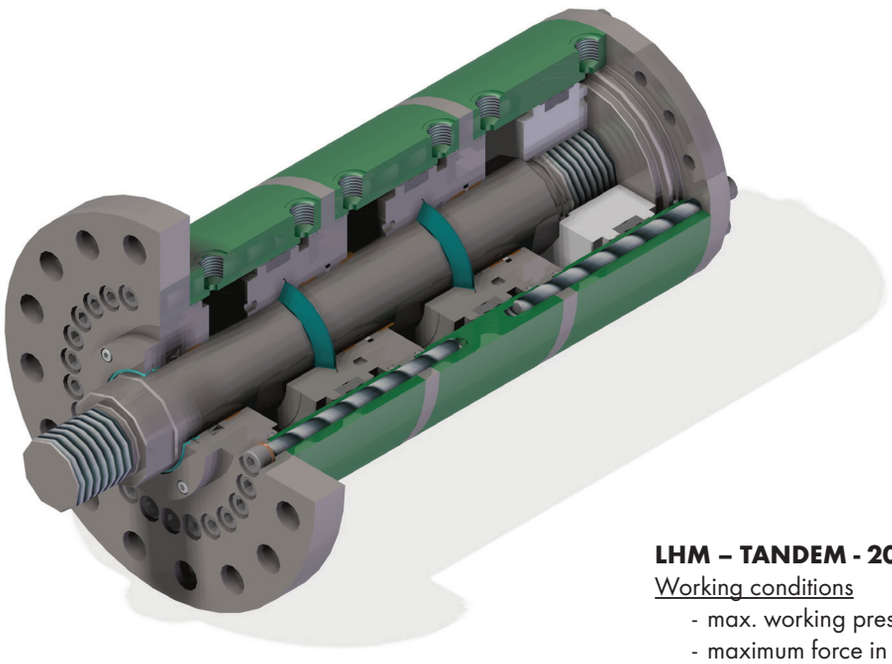

LHM – TANDEM - 200/100x50-3

Working conditions

- max. working pressure18MPa
- maximum force in small space
- for presses

year of manufacture 2011

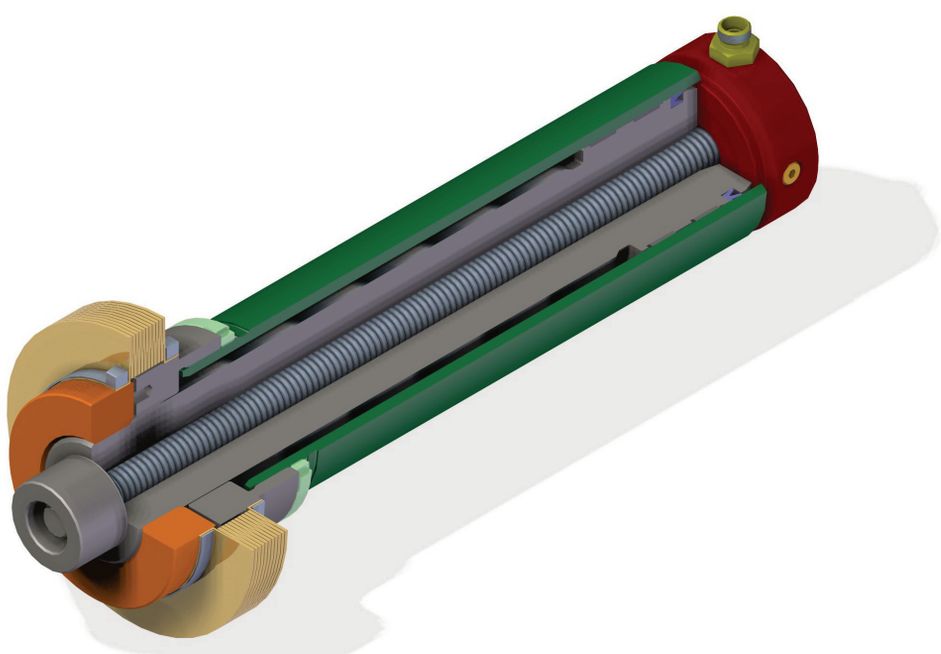

LHM 90x305-JČ-SPRING-OM

Working conditions

- max. working pressure 16MPa
- one - acting cylinder with spring for retracting and with mechanical locking possibility
- for building + manipulation with heavy loads

year of manufacture 2011

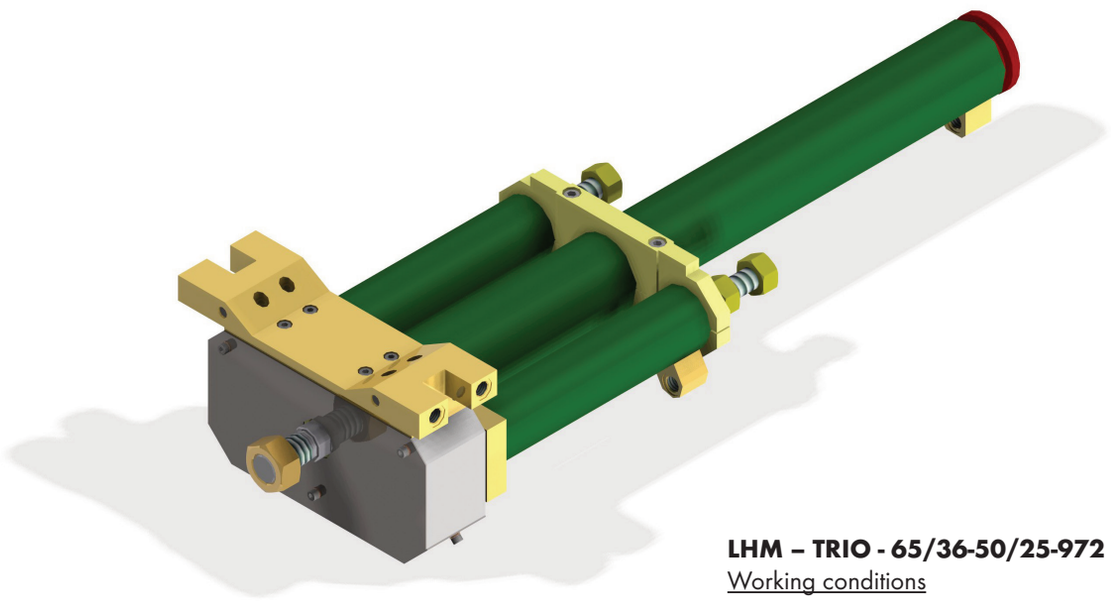

LHM – TRIO - 65/36-50/25-972

Working conditions

- max. working pressure 20MPa
- telescopis movement of drill table
- mining industry

year 2010

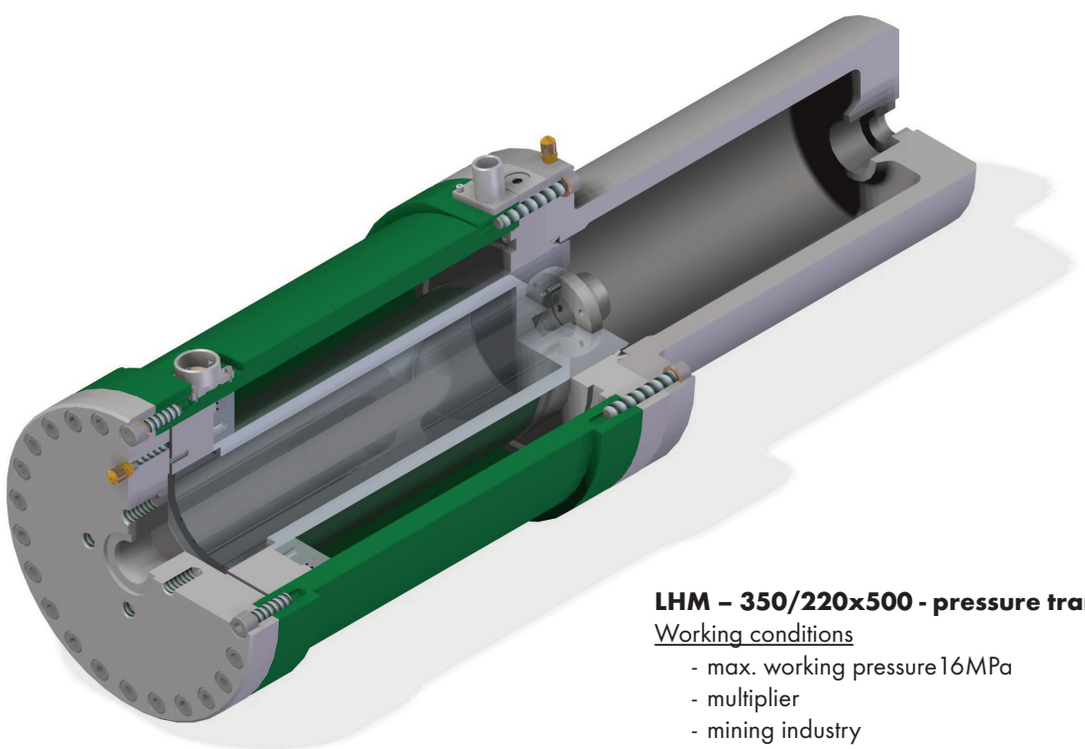

LHM – 350/220x500 - pressure transducer

Working conditions

- max. working pressure16MPa
- multiplier
- mining industry

year 2010

Equipment of hydraulic motors

EYES

Lifting eyes

BEARINGS

Articulated bearings, bearing bushes

PRESSURE INLETS

Pressure inlets

Welded-on eye Model 1

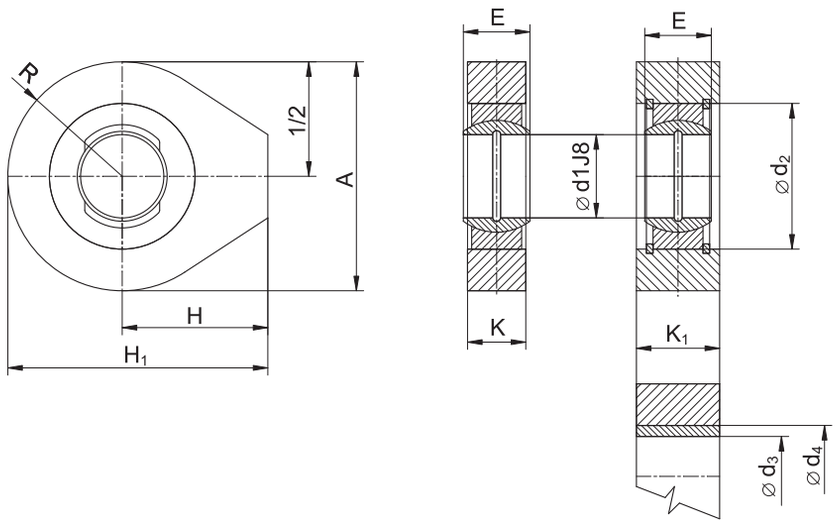

Marking	Ød$_1$	A	E	K	K$_1$	H	H$_1$	R	d$_2$	Ød$_3$ Ød$_4$
101	20	55	16	14		35	62.5	27.5	35	d$_4$ ≤ d$_2$ d$_3$ = according to the bearing bush order sheet
102	20	55	16		20	35	62.5	27.5	35	
103	25	65	20	18		38	70.5	32.5	42	
104	25	65	20		25	38	70.5	32.5	42	
105	25	70	20	18		42	77	35	42	
106	25	70	20		25	42	77	35	42	
107	30	85	22	20		50	92.5	42.5	47	
108	30	85	22		28	50	92.5	42.5	47	
109	35	95	25	25		60	107.5	47.5	55	
110	35	95	25		30	60	107.5	47.5	55	
111	40	105	28	25		65	117.5	52.5	62	
112	40	105	28		35	65	117.5	52.5	62	
113	45	120	32	30		75	135	60	68	
114	45	120	32		38	75	135	60	68	
115	50	125	35	30		80	142.5	62.5	75	
116	50	125	35		40	80	142.5	62.5	75	
117	50	140	35	33		80	150	70	75	
118	50	140	35		45	80	150	70	75	
119	60	160	44	40		90	170	80	90	
120	60	160	44		50	90	170	80	90	
121	70	180	49	45		100	190	90	105	
122	70	180	49		55	100	190	90	105	
123	80	200	55	50		120	220	100	120	
124	80	200	55		60	120	220	100	120	
125	90	220	60	55		130	240	110	130	
126	90	220	60		70	130	240	110	130	
127	100	240	70	60		140	260	120	150	
128	100	240	70		75	140	260	120	150	
129	110	280	70	60		170	310	140	160	
130	110	280	70		80	170	310	140	160	

The tolerance of K. K$_1$ eye thickness is given by the manufacturing tolerance of hot rolled metal plates ČSN 42 53 10.
The lubrication of knuckle bearing is only by the inner circle - pin.
In case of demand to lubricate with external circle - lubricator - it is necessary to exactly specify its position.

Welded-on eye Model 2

EYES

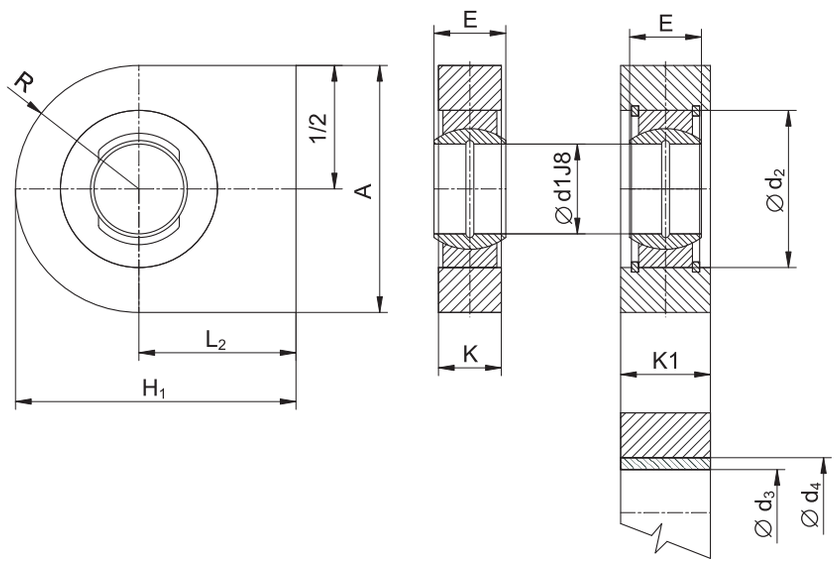

Marking	Ød$_1$	A	E	K	K$_1$	L$_2$	H$_1$	R	Ød$_2$	Ød$_3$ Ød$_4$
201	20	55	16	14		35	62.5	27.5	35	d$_4$ ≤ d$_2$ d$_3$ = according to the bearing bush order sheet
202	20	55	16		20	35	62.5	27.5	35	
203	25	65	20	18		38	70.5	32.5	42	
204	25	65	20		25	38	70.5	32.5	42	
205	25	70	20	18		42	77	35	42	
206	25	70	20		25	42	77	35	42	
207	30	85	22	20		45	87.5	42.5	47	
208	30	85	22		28	45	87.5	42.5	47	
209	35	95	25	25		55	102.5	47.5	55	
210	35	95	25		30	55	102.5	47.5	55	
211	40	105	28	25		60	112.5	52.5	62	
212	40	105	28		35	60	112.5	52.5	62	
213	45	120	32	30		65	125	60	68	
214	45	120	32		38	65	125	60	68	
215	50	125	35	30		70	132.5	62.5	75	
216	50	125	35		40	70	132.5	62.5	75	
217	50	140	35	33		70	140	70	75	
218	50	140	35		45	70	140	70	75	
219	60	160	44	40		90	170	80	90	
220	60	160	44		50	90	170	80	90	
221	70	180	49	45		100	190	90	105	
222	70	180	49		55	100	190	90	105	
223	80	200	55	50		120	220	100	120	
224	80	200	55		60	120	220	100	120	
225	90	220	60	55		130	240	110	130	
226	90	220	60		70	130	240	110	130	
227	100	240	70	60		140	260	120	150	
228	100	240	70		75	140	260	120	150	
229	110	280	70	60		170	310	140	160	
230	110	280	70		80	170	310	140	160	

The tolerance of K. K$_1$ eye thickness is given by the manufacturing tolerance of hot rolled metal plates ČSN 42 53 10.
The lubrication of knuckle bearing is only by the inner circle - pin.
In case of demand to lubricate with external circle - lubricator - it is necessary to exactly specify its position.

Welded-on eye Model 3

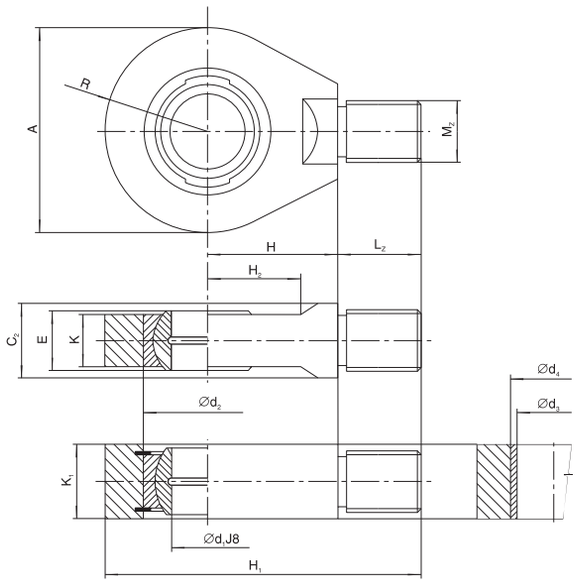

Marking	$Ød_1$	A	E	K	C_2	K_1	H	H_1	H_2	M_z	L_z	R	$Ød_2$	$Ød_3$ $Ød_4$
301A	20	55	16	14	20		35	82.5	25	14x1.5	20	27.5	35	$d_4 \leq d_2$ d_3 = according to the bearing bush order sheet
301B	20	55	16	14	20		35	82.5	25	16x1.5	20	27.5	35	
301C	20	55	16	14	20		35	82.5	25	18x1.5	20	27.5	35	
302A	20	55	16			20	35	82.5	25	16x1.5	20	27.5	35	
302B	20	55	16			20	35	82.5	25	18x1.5	20	27.5	35	
303A	25	65	20	18	22		38	100.5	27	18x1.5	30	32.5	42	
303B	25	65	20	18	22		38	100.5	27	20x1.5	30	32.5	42	
304A	25	65	20			25	38	100.5	27	18x1.5	30	32.5	42	
304B	25	65	20			25	38	100.5	27	20x1.5	30	32.5	42	
305A	25	70	20	18	25		42	111	30	22x1.5	34	35	42	
305B	25	70	20	18	25		42	111	30	24x1.5	34	35	42	
306A	25	70	20			25	42	111	30	22x1.5	34	35	42	
306B	25	70	20			25	42	111	30	24x1.5	34	35	42	
307A	30	85	22	20	28		50	132.5	35	24x1.5	40	42.5	47	
307B	30	85	22	20	28		50	132.5	35	27x2	40	42.5	47	
307C	30	85	22	20	28		50	132.5	35	30x2	40	42.5	47	
308A	30	85	22			28	50	132.5	35	24x1.5	40	42.5	47	
308B	30	85	22			28	50	132.5	35	27x2	40	42.5	47	
308C	30	85	22			28	50	132.5	35	30x2	40	42.5	47	
309A	35	95	25	25	30		60	147.5	40	27x2	40	47.5	55	
309B	35	95	25	25	30		60	147.5	40	30x2	40	47.5	55	
310A	35	95	25			30	60	147.5	40	27x2	40	47.5	55	
310B	35	95	25			30	60	147.5	40	30x2	40	47.5	55	
311A	40	105	28	25	35		65	162.5	42	30x2	45	52.5	62	
311B	40	105	28	25	35		65	162.5	42	36x2	45	52.5	62	
312A	40	105	28			35	65	162.5	42	30x2	45	52.5	62	
312B	40	105	28			35	65	162.5	42	36x2	45	52.5	62	
313A	45	120	32	30	40		75	185	50	36x2	50	60	68	
313B	45	120	32	30	40		75	185	50	42x2	50	60	68	
314A	45	120	32			38	75	185	50	36x2	50	60	68	
314B	45	120	32			38	75	185	50	42x2	50	60	68	
315A	50	125	35	30	45		80	202.5	55	42x2	60	62.5	75	
315B	50	125	35	30	45		80	202.5	55	52x2	60	62.5	75	
316A	50	125	35			40	80	202.5	55	42x2	60	62.5	75	
316B	50	125	35			40	80	202.5	55	52x2	60	62.5	75	

The tolerance of K, K_1 eye thickness is given by the manufacturing tolerance of hot rolled metal plates ČSN 42 53 10.
The lubrication of knuckle bearing is only by the inner circle - pin.
In case of demand to lubricate with external circle - lubricator - it is necessary to exactly specify its position.

EYES

Welded-on eye Model 4

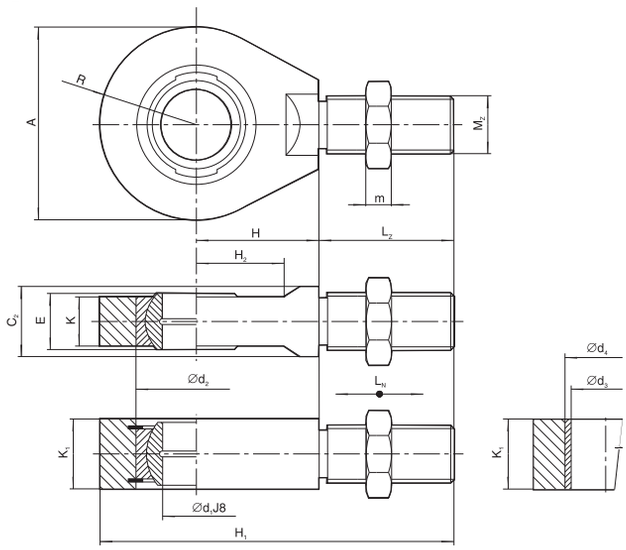

Marking	$Ød_1$	A	E	K	C_2	K_1	H	H_1	H_2	M_z	M	L_z	R	$Ød_2$	$Ød_3$ $Ød_4$	LN
401A	20	55	16	14	20		35	102.5	25	14x1.5	9	40	27.5	35	$d_4 \leq d_2$ d_3 = according to the bearing bush order sheet	±5
401B	20	55	16	14	20		35	102.5	25	16x1.5	9	40	27.5	35		±5
401C	20	55	16	14	20		35	102.5	25	18x1.5	9	40	27.5	35		±5
402A	20	55	16			20	35	102.5	25	16x1.5	9	40	27.5	35		±5
402B	20	55	16			20	35	102.5	25	18x1.5	9	40	27.5	35		±5
403A	25	65	20	18	22		38	126.5	27	18x1.5	9	50	32.5	42		±8
403B	25	65	20	18	22		38	126.5	27	20x1.5	9	50	32.5	42		±8
404A	25	65	20			25	38	126.5	27	18x1.5	9	50	32.5	42		±8
404B	25	65	20			25	38	126.5	27	20x1.5	9	50	32.5	42		±8
405A	25	70	20	18	25		42	137	30	22x1.5	10	60	35	42		±8
405B	25	70	20	18	25		42	137	30	24x1.5	10	60	35	42		±8
406A	25	70	20			25	42	137	30	22x1.5	10	60	35	42		±8
406B	25	70	20			25	42	137	30	24x1.5	10	60	35	42		±8
407A	30	85	22	20	28		50	162.5	35	24x1.5	12	70	42.5	47		±10
407B	30	85	22	20	28		50	162.5	35	27x2	12	70	42.5	47		±10
407C	30	85	22	20	28		50	162.5	35	30x2	12	70	42.5	47		±10
408A	30	85	22			28	50	162.5	35	24x1.5	12	70	42.5	47		±10
408B	30	85	22			28	50	162.5	35	27x2	12	70	42.5	47		±10
408C	30	85	22			28	50	162.5	35	30x2	12	70	42.5	47		±10
409A	35	95	25	25	30		60	177.5	40	27x2	12	70	47.5	55		±10
409B	35	95	25	25	30		60	177.5	40	30x2	12	70	47.5	55		±10
410A	35	95	25			30	60	177.5	40	27x2	12	70	47.5	55		±10
410B	35	95	25			30	60	177.5	40	30x2	12	70	47.5	55		±10
411A	40	105	28	25	35		65	197.5	42	30x2	14	80	52.5	62		±10
411B	40	105	28	25	35		65	197.5	42	36x2	14	80	52.5	62		±10
412A	40	105	28			35	65	197.5	42	30x2	14	80	52.5	62		±10
412B	40	105	28			35	65	197.5	42	36x2	14	80	52.5	62		±10
413A	45	120	32	30	40		75	223	50	36x2	15	88	60	68		±12
413B	45	120	32	30	40		75	223	50	42x2	15	88	60	68		±12
414A	45	120	32			38	75	223	50	36x2	15	88	60	68		±12
414B	45	120	32			38	75	223	50	42x2	15	88	60	68		±12
415A	50	125	35	30	45		80	242.5	55	42x2	15	100	62.5	75		±12
415B	50	125	35	30	45		80	242.5	55	52x2	15	100	62.5	75		±12
416A	50	125	35			40	80	242.5	55	42x2	15	100	62.5	75		±12
416B	50	125	35			40	80	242.5	55	52x2	15	100	62.5	75		±12

The tolerance of K, K_1 eye thickness is given by the manufacturing tolerance of hot rolled metal plates ČSN 42 53 10.
The lubrication of knuckle bearing is only by the inner circle - pin.
In case of demand to lubricate with external circle - lubricator - it is necessary to exactly specify its position.

Welded-on eye Model 5

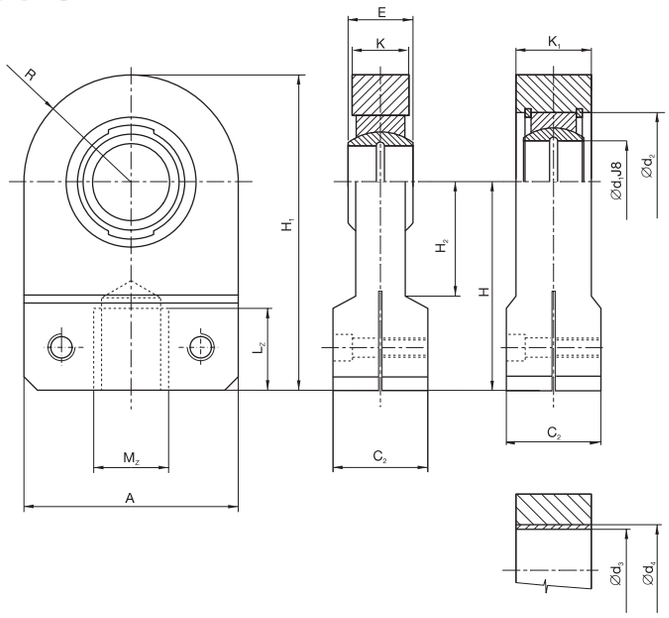

Marking	$Ød_1$	A	E	K	C_2	K_1	H	H_1	H_2	M_z	L_z	R	$Ød_2$	$Ød_3$ $Ød_4$
501A	20	55	16	14	25		55	82.5	25	16x1.5	20	27.5	35	$d_4 \leq d_2$ d_3 = according to the bearing bush order sheet
501B	20	55	16	14	25		55	82.5	25	18x1.5	20	27.5	35	
502A	20	55	16		25	20	55	82.5	25	16x1.5	20	27.5	35	
502B	20	55	16		25	20	55	82.5	25	18x1.5	20	27.5	35	
503A	25	65	20	18	30		68	100.5	27	18x1.5	30	32.5	42	
503B	25	65	20	18	30		68	100.5	27	20x1.5	30	32.5	42	
504A	25	65	20		30	25	68	100.5	27	18x1.5	30	32.5	42	
504B	25	65	20		30	25	68	100.5	27	20x1.5	30	32.5	42	
505A	25	70	20	18	35		78	113	30	22x1.5	34	35	42	
505B	25	70	20	18	35		78	113	30	24x1.5	34	35	42	
506A	25	70	20		35	25	78	113	30	22x1.5	34	35	42	
506B	25	70	20		35	25	78	113	30	24x1.5	34	35	42	
507A	30	85	22	20	35		90	132.5	35	24x1.5	40	42.5	47	
507B	30	85	22	20	40		90	132.5	35	27x2	40	42.5	47	
507C	30	85	22	20	40		90	132.5	35	30x2	40	42.5	47	
508A	30	85	22		35	28	90	132.5	35	24x1.5	40	42.5	47	
508B	30	85	22		40	28	90	132.5	35	27x2	40	42.5	47	
508C	30	85	22		40	28	90	132.5	35	30x2	40	42.5	47	
509A	35	95	25	25	40		96	143.5	40	27x2	40	47.5	55	
509B	35	95	25	25	40		96	143.5	40	30x2	40	47.5	55	
510A	35	95	25		40	30	96	143.5	40	27x2	40	47.5	55	
510B	35	95	25		40	30	96	143.5	40	30x2	40	47.5	55	
511A	40	105	28	25	40		106	158.5	42	30x2	45	52.5	62	
511B	40	105	28	25	50		106	158.5	42	36x2	45	52.5	62	
512A	40	105	28		40	35	106	158.5	42	30x2	45	52.5	62	
512B	40	105	28		50	35	106	158.5	42	36x2	45	52.5	62	
513A	45	120	32	30	50		120	180	50	36x2	50	60	68	
513B	45	120	32	30	50		120	180	50	42x2	50	60	68	
514A	45	120	32		50	38	120	180	50	36x2	50	60	68	
514B	45	120	32		50	38	120	180	50	42x2	50	60	68	
515A	50	125	35	30	60		140	200	55	42x2	60	62.5	75	
515B	50	125	35	30	60		140	200	55	52x2	60	62.5	75	
516A	50	125	35		60	40	140	200	55	42x2	60	62.5	75	
516B	50	125	35		60	40	140	200	55	52x2	60	62.5	75	

The tolerance of K, K_1 eye thickness is given by the manufacturing tolerance of hot rolled metal plates ČSN 42 53 10.
The lubrication of knuckle bearing is only by the inner circle - pin.
In case of demand to lubricate with external circle - lubricator - it is necessary to exactly specify its position.

EYES

Welded-on eye Model 6

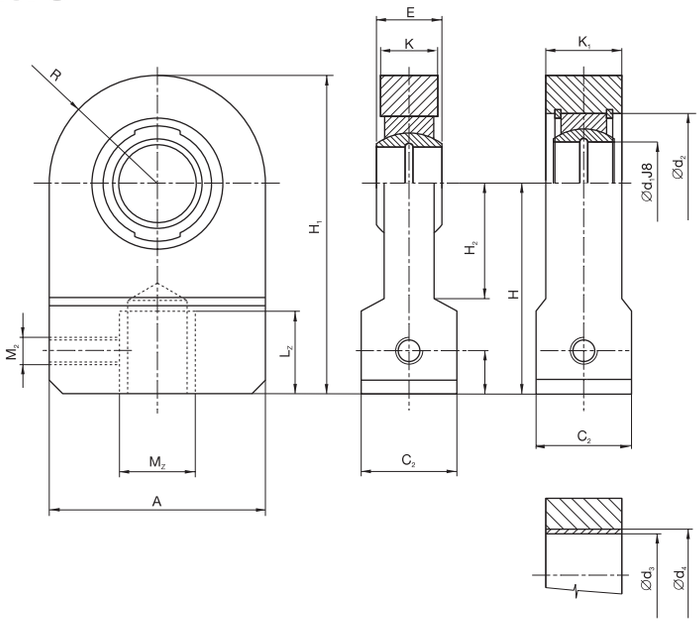

Marking	$Ød_1$	A	E	K	C_2	K_1	H	H_1	H_2	M_z	L_z	M_2	R	$Ød_2$	$Ød_3$ $Ød_4$
601A	20	55	16	14	25		55	82.5	25	16x1.5	20	6	27.5	35	$d_4 \leq d_2$ d_3 = according to the bearing bush order sheet
601B	20	55	16	14	25		55	82.5	25	18x1.5	20	6	27.5	35	
602A	20	55	16		25	20	55	82.5	25	16x1.5	20	6	27.5	35	
602B	20	55	16		25	20	55	82.5	25	18x1.5	20	6	27.5	35	
603A	25	65	20	18	30		68	100.5	27	18x1.5	30	6	32.5	42	
603B	25	65	20	18	30		68	100.5	27	20x1.5	30	6	32.5	42	
604A	25	65	20		30	25	68	100.5	27	18x1.5	30	6	32.5	42	
604B	25	65	20		30	25	68	100.5	27	20x1.5	30	6	32.5	42	
605A	25	70	20	18	35		78	113	30	22x1.5	34	6	35	42	
605B	25	70	20	18	35		78	113	30	24x1.5	34	6	35	42	
606A	25	70	20		35	25	78	113	30	22x1.5	34	6	35	42	
606B	25	70	20		35	25	78	113	30	24x1.5	34	6	35	42	
607A	30	85	22	20	35		90	132.5	35	24x1.5	40	8	42.5	47	
607B	30	85	22	20	40		90	132.5	35	27x2	40	8	42.5	47	
607C	30	85	22	20	40		90	132.5	35	30x2	40	8	42.5	47	
608A	30	85	22		35	28	90	132.5	35	24x1.5	40	8	42.5	47	
608B	30	85	22		40	28	90	132.5	35	27x2	40	8	42.5	47	
608C	30	85	22		40	28	90	132.5	35	30x2	40	8	42.5	47	
609A	35	95	25	25	40		96	143.5	40	27x2	40	8	47.5	55	
609B	35	95	25	25	40		96	143.5	40	30x2	40	8	47.5	55	
610A	35	95	25		40	30	96	143.5	40	27x2	40	8	47.5	55	
610B	35	95	25		40	30	96	143.5	40	30x2	40	8	47.5	55	
611A	40	105	28	25	40		106	158.5	42	30x2	45	12	52.5	62	
611B	40	105	28	25	50		106	158.5	42	36x2	45	12	52.5	62	
612A	40	105	28		40	35	106	158.5	42	30x2	45	12	52.5	62	
612B	40	105	28		50	35	106	158.5	42	36x2	45	12	52.5	62	
613A	45	120	32	30	50		120	180	50	36x2	50	12	60	68	
613B	45	120	32	30	50		120	180	50	42x2	50	12	60	68	
614A	45	120	32		50	38	120	180	50	36x2	50	12	60	68	
614B	45	120	32		50	38	120	180	50	42x2	50	12	60	68	
615A	50	125	35	30	60		140	200	55	42x2	60	12	62.5	75	
615B	50	125	35	30	60		140	200	55	52x2	60	12	62.5	75	
616A	50	125	35		60	40	140	200	55	42x2	60	12	62.5	75	
616B	50	125	35		60	40	140	200	55	52x2	60	12	62.5	75	

The tolerance of K, K_1 eye thickness is given by the manufacturing tolerance of hot rolled metal plates ČSN 42 53 10.
The lubrication of knuckle bearing is only by the inner circle - pin.
In case of demand to lubricate with external circle - lubricator - it is necessary to exactly specify its position.

Lifting eye Model TS-C

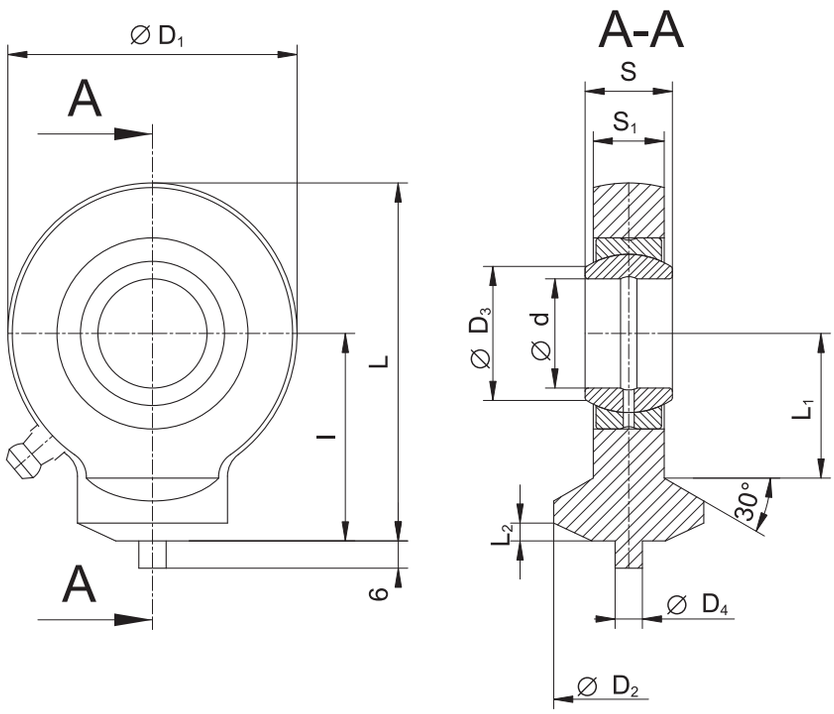

marking	d	S	l	D1	D2	D4	D3	S1	L	L1	L2	weight
TS12C	12	10	27	34	17,5	3	15	8	44	18	2	0,065
TS15C	15	12	31	40	21	4	18,4	10	51	20	2,5	0,12
TS 20C	20	16	38	53	27,5	4	24,1	13	64,5	27,5	3	0,25
TS 25C	25	20	45	64	33,5	4	29,3	17	77	33	4	0,45
TS 30C	30	22	51	73	40	4	34,2	19	87,5	37,5	4	0,675
TS 35C	35	25	61	82	47	4	39,7	21	102	43	4	0,95
TS 40C	40	28	69	92	52	4	45	23	115	48	5	1,4
TS 45C	45	32	77	102	58	6	50,7	27	128	52	5	1,91
TS 50C	50	35	88	112	62	6	56	30	144	59	6	2,65
TS 60C	60	44	100	135	70	6	66,8	38	167,5	72,5	8	4,6
TS 70C	70	49	115	160	80	6	77,8	42	195	86	10	7
TS 80C	80	55	141	180	95	6	89,4	47	231	98	10	10,8

Lifting eye Model TS-N

EYES

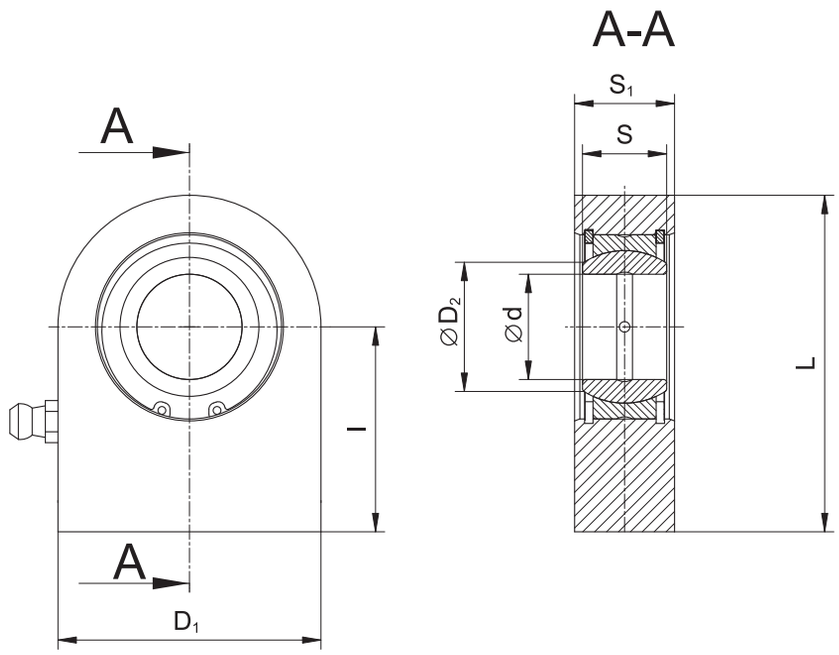

marking	d	S	l	D1	D2	S1	L	weight
TS15N	15	12	31	45		16	53,5	0,22
TS 20N	20	16	38	50	24,1	19	63	0,325
TS 25N	25	20	45	55	29,3	23	72,5	0,5
TS 30N	30	22	51	65	34,2	28	83,5	0,825
TS 35N	35	25	61	83	39,7	30	102,5	1,475
TS 40N	40	28	69	100	45	35	119	2,48
TS 45N	45	32	77	110	50,7	40	132	3,45
TS 50N	50	35	88	123	56	40	149,5	4,45
TS 60N	60	44	100	140	66,8	50	170	7,13
TS 70N	70	49	115	164	77,8	55	197	10,7
TS 80N	80	55	141	180	89,4	60	231	15,1
TS 90N	90	60	150	226	98,1	65	263	23,4
TS 100N	100	70	170	250	109,5	70	295	33,1
TS 110N	110	70	185	295	121,2	80	332,5	48,5

Lifting eye Model TAPR-N

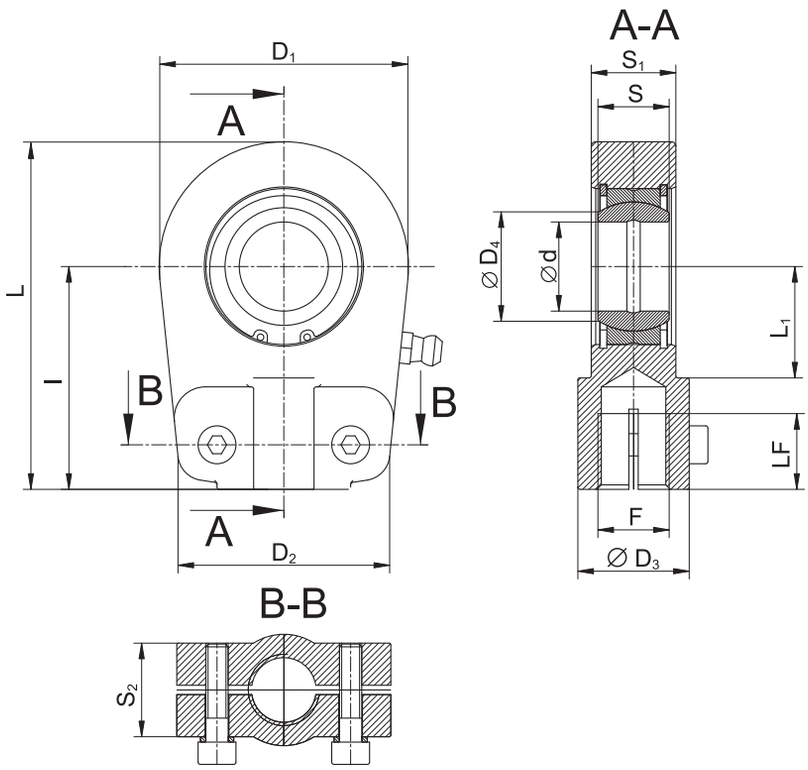

marking	d	l	S	LF	D1	D2	D3	D4	S1	S2	L	L1	F	weight
TAPR 20N	20	50	16	17	56	46	25	24,1	19	21	80	25	M16x1,5	0,4
TAPR 25N	25	50	20	17	56	46	25	29,3	23	21	80	28	M16x1,5	0,475
TAPR 30N	30	60	22	23	64	50	32	34,2	28	26	94	30	M22x1,5	0,7
TAPR 35N	35	70	25	29	78	66	40	39,7	30	28	112	38	M28x1,5	1,15
TAPR 40N	40	85	28	36	94	76	49	45	35	33	135	45	M35x1,5	2,075
TAPR 50N	50	105	35	46	116	90	61	56	40	37	168	55	M45x1,5	3,575
TAPR 60N	60	130	44	59	130	120	75	66,8	50	46	200	65	M58x1,5	6,2
TAPR 70N	70	150	49	66	154	130	86	77,8	55	51	232	75	M65x1,5	9,2
TAPR 80N	80	170	55	81	176	160	105	89,4	60	55	265	80	M80x2	13,2
TAPR 90N	90	210	60	101	206	180	124	98,1	65	60	322	90	M100x2	19,6
TAPR 100N	100	235	70	111	231	200	138	109,5	70	65	360	105	M110x2	26,31
TAPR 110N	110	265	70	125	266	220	152	121,2	80	74	407	115	M120x3	39,2

Screwed eye Model EJ

EYES

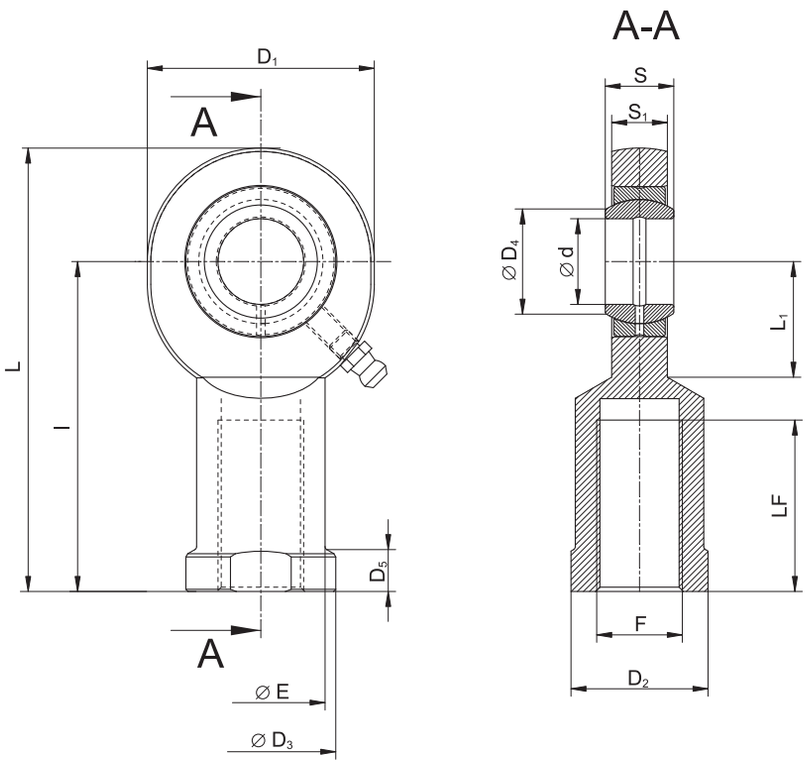

marking	d	l	S	LF	D1	E	D2	D3	D4	D5	S1	L	L1	F	weight
EJ 12	12	50	10	23	34	17,5	19	22	15	7	8	67	17,5	M12x1,75	0,096
EJ 15	15	61	12	30	40	21	22	26	18,4	8	10	81	20	M14x2	0,18
EJ 20	20	77	16	40	53	27,5	32	35	24,1	10	13	103,5	27,5	M20x1,5	0,39
EJ 25	25	94	20	48	64	33,5	36	42	29,3	12	17	126	32	M24x2	0,58
EJ 30	30	110	22	56	73	40	41	50	34,2	15	19	146,5	37	M30x2	1,02
EJ 35-2RS	35	125	25	60	82	47	50	58	39,7	15	21	166	42	M36x3	1,46
EJ 40-2RS	40	142	28	65	92	56	56	65	45	18	23	188	48	M39x3	1,93
EJ 45-2RS	45	145	32	65	102	62	62	70	50,7	20	27	196	52	M42x3	2,65
EJ 50-2RS	50	160	35	68	112	68	68	75	56	20	30	216	59	M45x3	3,53
EJ 60-2RS	60	175	44	70	135	78	78	88	66,8	20	38	242,5	75	M52x3	5,55
EJ 70-2RS	70	200	49	80	160	85	85	98	77,8	20	42	280	87	M56x4	8,4
EJ 80-2RS	80	230	55	85	180	102	102	110	89,4	25	47	320	100	M64x4	12,7

Screwed eye Model EA

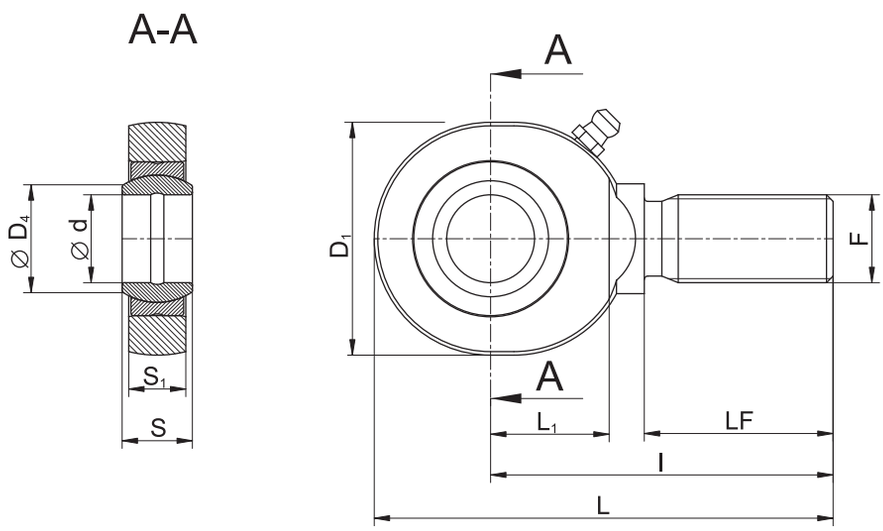

marking	d	l	S	LF	D1	D4	S1	L	L1	F	weight
EA12	12	54	10	30	34	15	8	71	18	M12x1,75	0,086
EA15	15	63	12	34	40	18,4	10	83	20	M14x2	0,14
EA20	20	78	16	43	53	24,1	13	106,5	27	M20x1,5	0,31
EA25	25	94	20	53	64	29,3	17	126	33	M24x2	0,56
EA30	30	110	22	65	73	34,2	19	146,5	37	M30x2	0,89
EA35	35	140	25	82	82	39,7	21	181	42	M36x3	1,4
EA 40-2RS	40	150	28	86	92	45	23	196	48	M39x3	1,8
EA 45-2RS	45	163	32	94	102	50,7	27	214	52	M42x3	2,6
EA 50-2RS	50	185	35	106	112	56	30	241	60	M45x3	3,4
EA 60-2RS	60	210	44	115	135	66,8	38	277,5	75	M52x3	5,9
EA 70-2RS	70	235	49	125	160	77,8	42	315	87	M56x4	8,2
EA 80-2RS	80	270	55	140	180	89,4	47	360	100	M64x4	12

Welded-on eye Model CSR

EYES

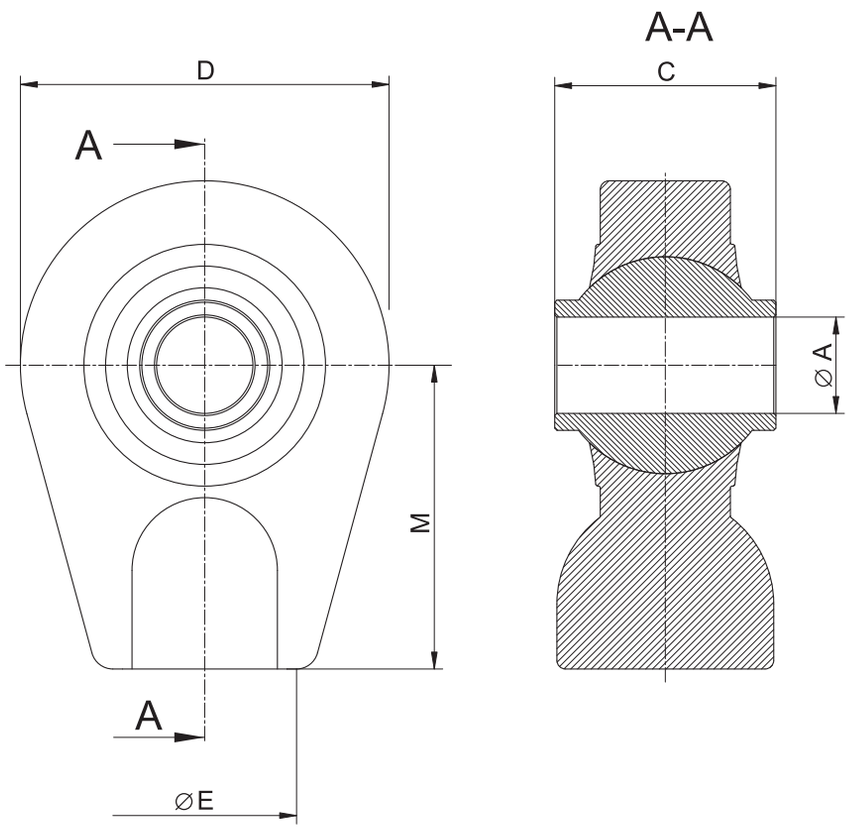

marking	A	C	M	D	E
CSR0010708	19,3	44	58	62	pr.34
CSR0010720	20,2	44	58	62	pr.34
CSR0010725	22,2	35	50	62	pr.26
CSR0010740	25,4	51	65	75	pr.38
CSR0010810	30,2	55	65	83	pr.50
CSR0010812	35,2	55	65	83	pr.50
CSR0010820	40,2	75	85	108	pr.60
CSR0010840	45,2	75	85	108	pr.60
CSR0010860	50,2	75	85	108	pr.60

Welded-on eye Model CSR1

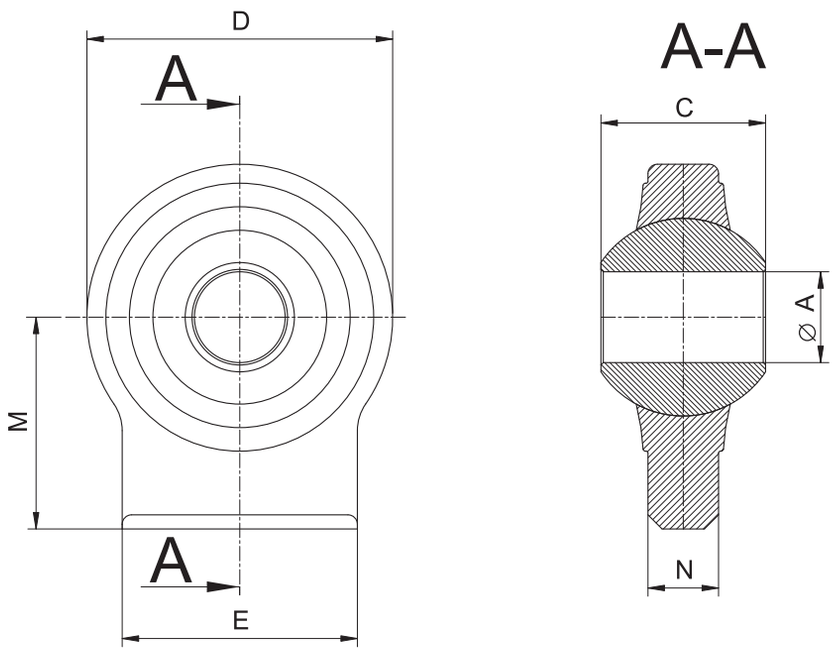

marking	A	E	D	M	C(-0,2)	N
CSR0010497	19,3	50	65	45	35	15
CSR0010498	22,4	50	65	45	35	15
CSR0010550	25,4	70	83	55	35	18
CSR0010560	28,8	70	83	55	35	18
CSR0010612	34,4	80	108	65	45	24
CSR0010617	42,4	80	108	65	45	24

Fork Model KLP

EYES

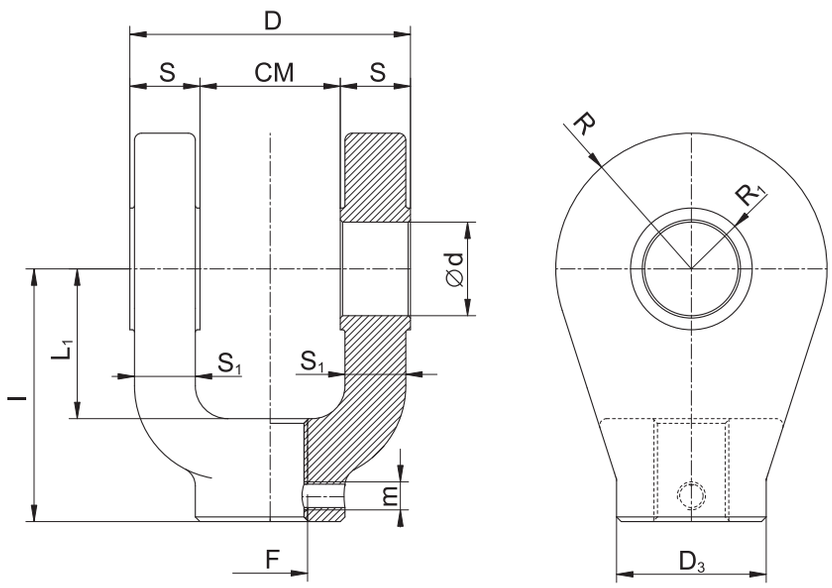

marking	CM	d	l	D	D3	F	L1	R	S	R1	S1	m
KLP10	12	10	32	24	19	M10x1,25	13	12	6	10	5	M5x5
KLP12	16	12	36	32	21	M12x1,25	19	17	8	15	7	M5x5
KLP14	20	14	38	40	21	M14x1,5	19	17	10	15	8	M5x5
KLP16	30	20	54	60	32	M16x1,5	32	29	15	26	13	M6x6
KLP27	40	28	75	80	40	M27x2	39	34	20	30	17	M6x6
KLP33	50	36	99	100	56	M33x2	54	50	25	46	22	M8x8
KLP42	60	45	113	120	56	M42x2	57	53	30	49	27	M8x8
KLP48	70	56	126	140	75	M48x2	63	59	35	38	31	M8x8
KLP64	80	70	168	160	95	M64x3	83	78	40	45	37	M12x12

Pin PF

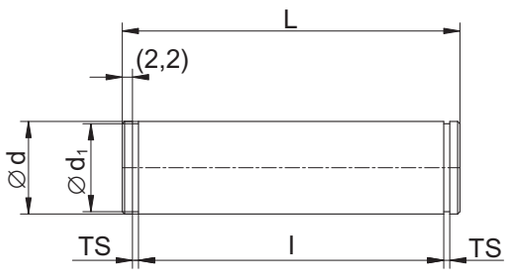

marking	d	L	d1	l	TS
PF2910	10	34	9.6	29	1.1
PF2911	12	43	11.5	37	1.1
PF2912	14	51	13.4	45	1.1
PF2914	20	73	19	66	1.3
PF2915	28	95	26.6	87	1.6
PF2916	36	117	34	107	1.85
PF2917	45	139	42.5	129	1.5
PF2918	56	161	53	149	2.17
PF2919	70	181	67	169	2.65

BEARINGS

Articulated bearings, bushes

Bearing GE

Ød$_1$	12	15	20	25	30	35	40	45	50	55	60	70	80	90	100	110
Ød$_2$	22	26	35	42	47	55	62	68	75	85	90	105	120	130	150	160
C	7	9	12	16	18	20	22	25	28	32	36	40	45	50	55	55
E	10	12	16	20	22	25	28	32	35	40	44	49	55	60	70	70

Dimensions according to ISO 6124, ČSN 02 3515

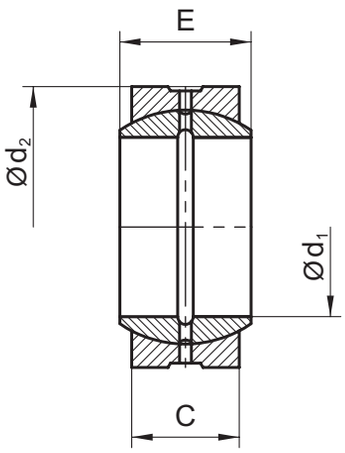

Bearing GEW

Ød$_1$	12	16	20	25	32	40	50	63	80	100
Ød$_2$	22	28	35	42	52	62	75	95	120	150
Ød11	15,5	20	25	30,5	37	46	57	71,5	91	113
C	7	9	12	16	18	22	28	36	45	55
E	12	16	20	25	32	40	50	63	80	100

Dimensions according to ISO 6124, ČSN 02 3516

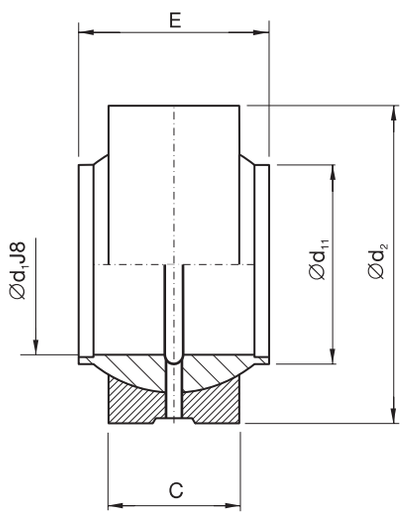

Bearing bushes

Ød3 čep f7	16	18	20	22	24	25	30	35	40	45	50	55	60	65	70	75	80	85	90	100	110
Ød4 H7	18	20	23	25	27	28	34	39	44	50	55	60	65	70	75	80	85	90	95	105	115
l	Length l is optional acc. to eye width																				

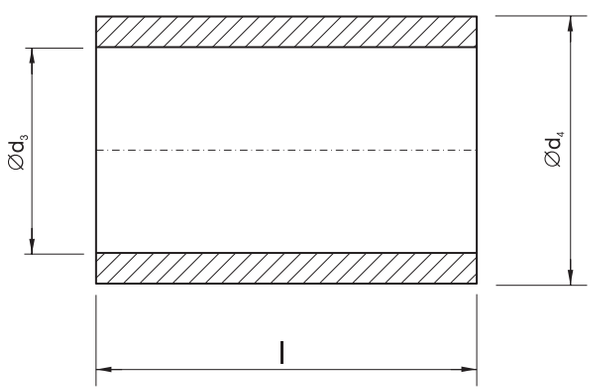

Pressure inlets, venting

Pressure inlets "M"

M	M10x1	M12x1.5	M14x1.5	M16x1.5	M18x1.5	M20x1.5	M22x1.5	M27x2	M33x2	M42x2
∅A	16	18	20	22	24	26	29	36	43	49
∅B	20	22	24	26	28	30	32	40	50	62
C	0.5	0.5	1	1	1	1	1	1.5	1.5	2
D	12	18	18	18	18	18	18	22	22	25

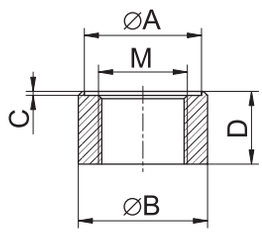

Pressure inlets for valves "M"

M	M14x1.5	M16X1.5	M18X1.5	M20X1.5	M22X1.5	M27X2
∅A	20	24	24	26	29	36
∅B	24	28	28	30	32	40
C	1	1	1	1	1	1.5
D	22	26	26	30	30	38
E	34	38	38	46	46	55.5
F	40	45	45	50	50	60

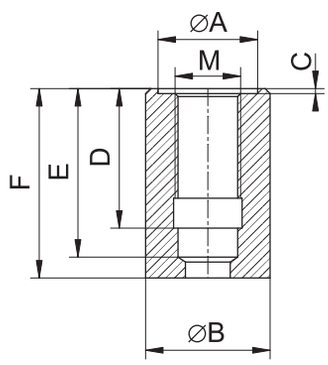

PRESSURE INLETS

Pressure inlets "G"

G	G1/4"	G3/8"	G1/2"	G3/4"	G1"
∅A	20	24	29	36	41
∅B	24	28	32	40	50
C	1	1	1	1,5	1,5
D	18	18	18	22	25

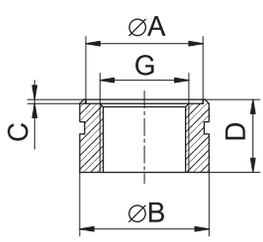

Pressure inlets for valves "G"

G	G1/4"	G3/8"	G1/2"	G3/4"
∅A	20	24	29	36
∅B	24	28	32	40
C	1	1	1	1,5
D	22	26	30	38
E	34	38	46	55,5
F	40	45	50	60

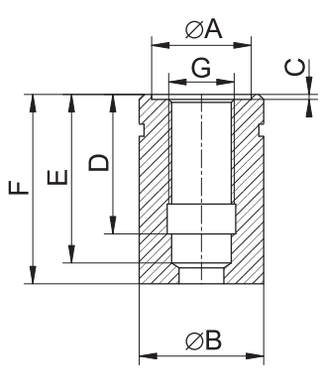

Air venting

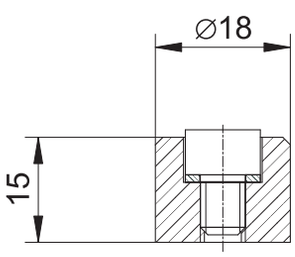

Diagram of ultimate strength

- For the calculation of l_r we do not consider or it is not allowed to load the piston rod by the radial force.
- For operations of the LHM under nominal values of working parameters we use our assigned safety coefficient **kv**=2.
  For cases of LHM usages under higher values of working parameters we recommend to increase the **kv** value.
- The **kv** value should be also checked in context of the whole machine asset.

Euler – area 2

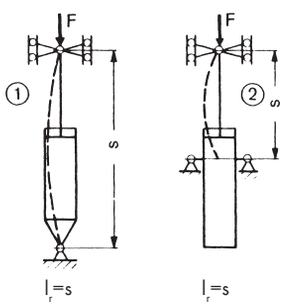

Euler – area 3

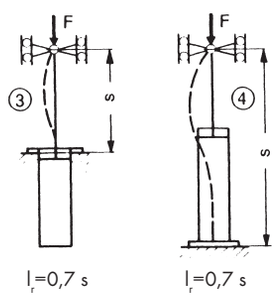

Euler – area 4 Euler – area 1

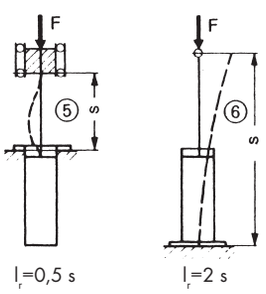

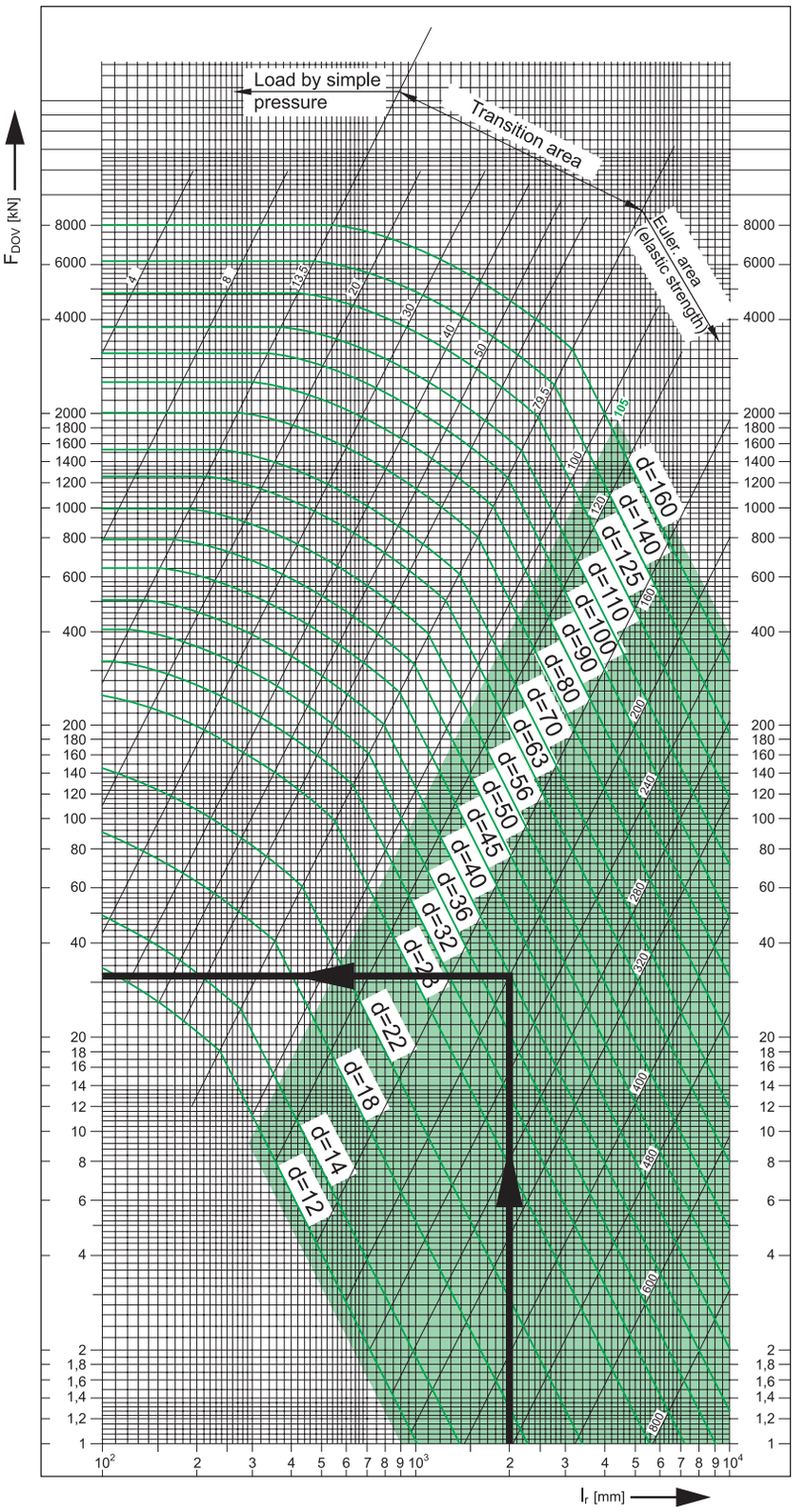

Determination of allowed load:

- determine the Euler area
- determine the reduced length l_r
- for the given **d** we determine the allowed load of F_{DOV} power (l_r 2000 mm, piston rods 40 mm, → F_{DOV} = 32 kN)

HYDRAULICS s.r.o. Sehradice 217, 763 23 Sehradice
tel.: 577 199 211, fax: 577 199 212
www.hydraulics.cz, e-mail: hydraulics@hydraulics.cz
ID: 18757537, TAX ID: CZ18757537

PRODUCT DOCUMENTATION ► OPERATING INSTRUCTIONS

Linear hydraulic motor type/dimensions:

type, dimension
number of product

Safety instructions:

–All maintenance works / lubrication of bearings, cleaning/ must be performed upon LHM idle state
–LHM can be disconnected from the pressure source only when LHM is depressurized (danger of pressure oil leakage)
–When handling in horizontal position, watch for possible piston rod movement

Technical description of product:

The linear hydraulic motor is the element that converts the pressure energy to the mechanical energy – to the xial power of the piston rod in both directions. It is designed to be built into the kinematics of machinery. Its correct function and required parameters are achieved by adhering to specified operating conditions: (see below).
Every hydraulic motor is composed of the tube with precision worked inner diameter within the H8 allowance and polished and chromed piston rod with the dimension tolerance f7. With next assembly parts and components - lip, piston, plug, pressure inputs and seal is possible to assemble the whole module of hydraulic cylinder, which is the base of functionality - converting the pressure energy to the mechanical energy. For installation into the machinery is hydraulic cylinder equipped solid elements - lifting eyes - screwed or welded, flanges, pins or another technical solutions.
Basically are this hydraulics cylinders welded, screwed or combination of both.

Instructions for correct function and use:

Linear hydraulic motors of the specified type do not require any special conditions for maintenance and operation. Its correct function and required parameters are achieved by adhering to specified operating conditions:
- LHM can operate in any position, unless provided for otherwise.
- Any piston rod radial load by an external force or any piston rod rotational movement during the work cycle are not permitted.
- When in operation, no mechanical damage to the piston rod may occur.
- in its end positions, the hydraulic motor may not be subjected to external forces or to inertia mass forces exceeding the 1.25 multiple of working pressure.
- During operation, hinge bearings must be regularly and sufficiently lubricated.
- LHM must be assembled under conditions, which limit any damage to functional elements, and the internal space must be protected against any impurity infiltrations.
- thoroughly check : LHM connection to the pressure supply (danger of pressure oil leakage)
  : LHM assembly to the respective machinery kinematics system
  : LHM bleeding in the hydraulic system
- when fitting to the kinematics system, free incline of the hydraulic cylinder body in the lateral direction within the extent of permitted incline of the hinge bearing must be ensured.
- LHM must not be exposed to any aggressive agents, aggressiveness of which would exceed the guaranteed resistance value for the motor piston rod used. The resistance value is specified in technical conditions.
- the piston rod continuously subjected to external environment action, must be regularly lubricated

Handling and storage:

- When handling LHM, the horizontal position should be preferred
- LHM, the weight of which requires handling with a hoist, are to be grabbed by the cylinder body in its centre of gravity. It is possible to handle LHM by grabbing it by, and fixing to, cylinder loops, however the piston rod must be fully inserted.
- LHMs are to be stored in its horizontal position with properly confined connection oil inlets and piston rod fully inserted.
- when storing for longer periods of time, LHM should be rotated by its axis

TEchnical conditions:

Rated pressure	..... MPa	Maximum pressure	..... MPa
Air temperature min./max.	.....°C	Working fluid temperature min./max.	..... °C
Working fluid	.....	Maximum working speed pracovní rychlost	..... m/s
Required filtration	..... µm	Recomended speed of piston rod	..... m/s

The piston rod resistance due to ISO 4540 ..... h.

Technical notes:

Specification: **HYDRAULICS SEHRADICE**
type - dimension
serial number
max. operating pressure
serial number

Warranty - Warranty Terms:

Manufacturer shall warranty the product pursuant to the commercial code.
During the warranty period of 12 month, the manufacturer shall remedy, free of charge, all functional defects, which shall be established by the customer and which shall be dully claimed. Post-warranty service is provided by Hydraulics s.r.o. Sehradice.

List of sealants used:

►MANUFACTURER'S QUALITY CERTIFICATE

We hereby certify that the product

type / dimensions of linear hydraulic motor _____

serial number _____

weight kg _____

was subjected to tests pursuant to:

ISO 10100:2001 Hydraulic Drives – cylinders – acceptance tests
ČSN 11 9372:1987 external leaks
ČSN 11 9373:1987 ,ČSN 11 9008:1991 function and starting pressure

testing pressure MPa _____

and no defects were ascertained.

..... Issued by

..... Date and place of issue

►MACHINE PART DECLARATION

Manufacturer: HYDRAULICS s.r.o.
Sehradice 217
763 23 Dolní Lhota u Luhačovic
Czech Republic
ID: 18757537, VAT no: CZ18757537

declares that the linear hydraulic motors meets the essential requirements of the relevant technical regulations pursuant to Government č.176 / 2008 Sb., that the relevant technical documentation was done, and it is safe for normal period of application and under conditions of normal usage specified in the instructions for use, and that the above specified partly completed machinery must not be put into service until an ES - Declaration of Conformity final machinery into which it is to be installed, according to Section 13 of Act no. 22/1997 Sb. as amended, and NV no. 176/2008 Sb.§5 (2006/42 / ES)

Harmonized technical standards applied

ČSN EN ISO 12100:2011 Safety of machinery equipment

ČSN EN ISO 4413:2011 Hydraulics - general rules and safety requirements for hydraulic systems and their components

Kráčalík Libor, Company Authorized Agent

..... person responsible

1. 7. 2011 Sehradice
..... date and place of issue

CUSTOMER'S FORM

Company ☐ ID ☐
Contact person ☐ tel/fax/e-mail ☐

Linear hydraulic motor: piston diameter / rod diameter / lift

Plunger – without guided piston ☐
– with guided piston ☐
– with piston rod pull-out end stop in cylinder ☐
– without end stop (with piston rod pull-out end stop on the construction) ☐

–piston rod return movement – mechanically – by external force ☐
– by spring in the plunger ☐

Single acting linear hydraulic motor – it is exactly double acting linear hydraulic motor where the pressure oil is in one chamber only – the second one is filled with air.

Double acting linear hydraulic motor ☐
Double acting linear hydraulic motor – with continuous piston rod ☐
– damping at end positions – no ☐ – yes ☐

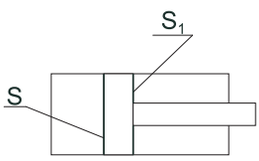

without regulation ☐
regulation of both positions ☐
regulation on piston rod pull-out – S_1 ☐
regulation on piston rod pull-in – S ☐

Operating parameters

Pressure min. S_1		MPa	Piston rod pull-out speed		m/s
Pressure min. S		MPa	Piston rod pull-in speed		m/s
Operating pressure S_1		MPa	Oil temperature		°C
Operating pressure S		MPa	Ambient temperature		°C
Pressure max. S_1		MPa	Working medium		
Pressure max. S		MPa	Working position of the hydraulic motor		
Pressure peak S_1		MPa			
Pressure peak S		MPa			

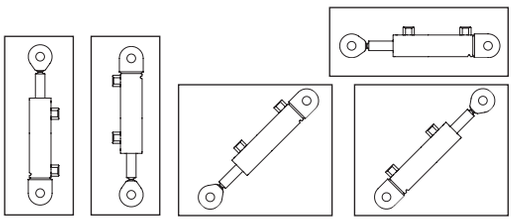

Operating conditions

Type of device ☐
Function of the hydraulic motor ☐
Work intensity ☐ (cycles/hour, min, sec, ...)
Provoz occasional | one-working | two-working | three-working | continual

Operating environment

Weather conditions ☐ Dust ☐ Clear ☐ Water ☐ chem. corrosive ☐ Other ☐

Hydraulic motor drawing

Technical parameters of used materials

Commonly used types

CYLINDER COVER

- the tube welded and calibrated within the inner diameter allowance H9 - Rm = 570 MPa - DIN 2393
- the tube cold-drawed and rolled or honed within the inner diameter allowance H8 - Rm = 570 MPa - DIN 2391

BAR

- 20MnV6 - bar with a chrome layer 20-30 µm - Rm = 500 MPa
- 42CrMo4V - bar with a chrome layer 20-30 µm - Rm = 900 MPa
- HIPERCHOM 200 - material 20MnV6 - bar with a chrome layer c. 50 µm - Rm = 500 MPa - resistance in soil chamber 200 hours to defined damage
- NiCr 350 - material 20MnV6 - common bar with a chrome and nickel layers - Rm = 500 MPa - resistance in soil chamber 350 hours to defined damage
- Ck 45 or C50 - surface-hardened bar with a chrome layer 20-30 µm - Rm = 500 MPa
- 42CrMo4V - IH - surface-hardened bar with a chrome layer 20-30 µm - Rm = 900 MPa
- stainless steel rod with hardened chrome surface finish 20-30 µm

HYDRAULIC MOTORS TESTS

Each LHM manufactured in Hydraulics company is tested before delivery to the customer via final inspection. It is separated to several levels:

- visual check
- check of construction and integration dimensions
- leak test (done on test stend using the pressure mineral oil HM32)

Inspection methodology is based on: ČSN 11 9008
ČSN 11 9372
ČSN 11 9373, resp. ISO 10 100

SURFACE FINISH

In common order the surface adjustment is the final operation. As a standard it is done by painting with base synthetic colour S 2035 hue 0840 / red-brown/.
There are many ways of the surface adjustment:

- with other colour with other hue
- galvanization – zinc deposition
  – nickel plating
- with nitride
- without surface adjustment – pure metal

GUARANTEE

Our products - linear hydraulic motors - are subject to warranty under the commercial code. During the warranty period, the manufacturer shall, free of charge, without any undue delays remedy all functional defects, which shall be duly claimed and which were not due to incorrect usage of the product or failure to adhere to technical conditions.
The warranty period is 12 months from the date of sale.
We must also keep an eye on the life cycle of the LHM. It is determined according to ČSN 11 9372 to minimum of 10^6 cycles (lifts) for hydraulic motor lift to 500 mm, or 1000 km of course under given parameters.
In some cases it is possible to determine different warranty conditions.

Notes